Operating Instructions

Barrier
MHTM™ MicroDrive
Access XL / XXL

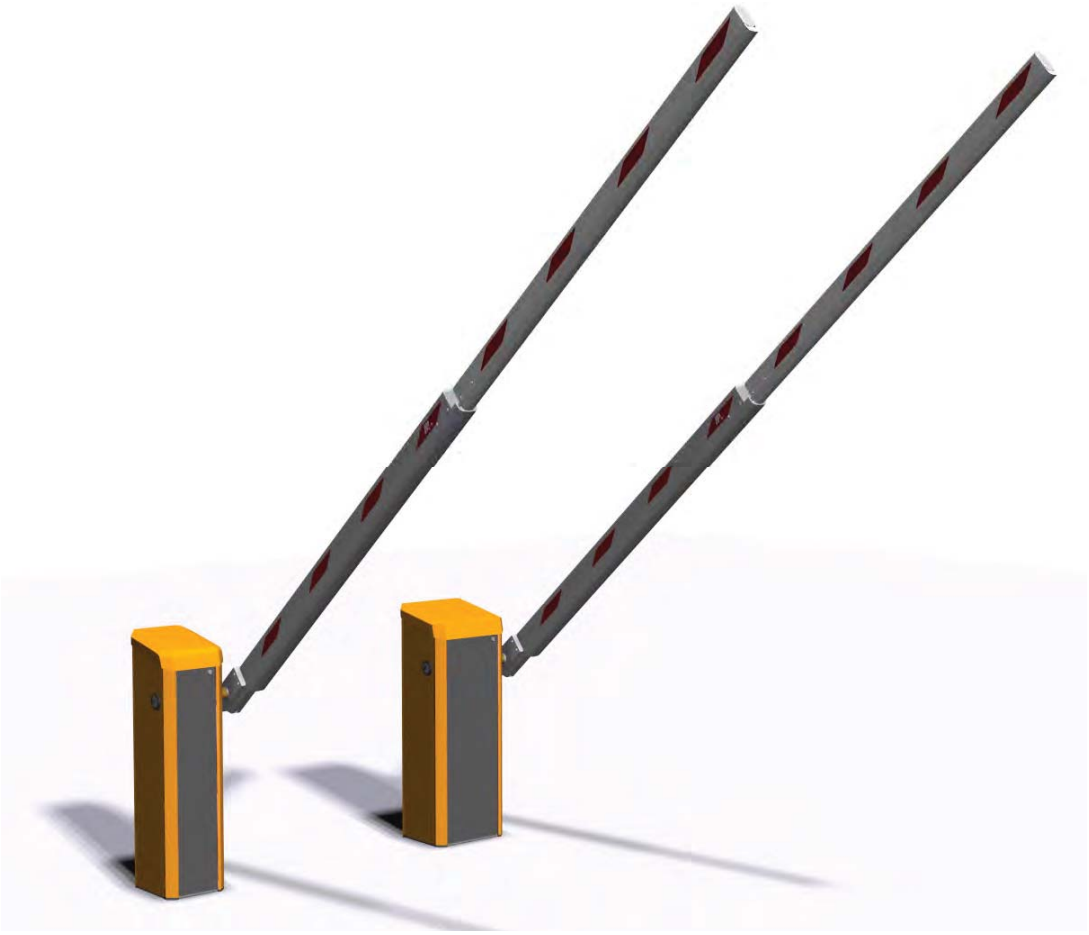

Doc-ID: 5815,0009EN
Version: 03

Translation of the Original Operating Instructions

MAGNETIC Autocontrol GmbH
Grienmatt 20
79650 Schopfheim
Germany

Tel.: +49 (0)7622 695 5
Fax.: +49 (0)7622 695 602
E-Mail: info@ac-magnetic.com
Internet: www.ac-magnetic.com

Contents

1 General ... 7
1.1 Information regarding the operating instructions ... 7
1.2 Pictogram explanation ... 8
1.3 Limitation of liability ... 9
1.4 Copyright protection ... 9
1.5 Scope of delivery ... 10
1.6 Warranty ... 10
1.7 Disclaimer ... 10
1.8 Customer service ... 10
1.9 EC-Declarations of conformity ... 11
1.10 Performance declaration ... 11
1.11 Environmental protection ... 11
2 Safety ... 12
2.1 Intended use of the barriers ... 12
2.1.1 Intended use for certain road vehicles ... 12
2.1.2 Barrier, pedestrian traffic impossible ... 12
2.1.3 Barrier, pedestrian traffic not impossible ... 13
2.1.4 Non-intended use ... 13
2.2 Operator's responsibility ... 14
2.3 Changes and modifications ... 14
2.4 Specialists and operating personnel ... 15
2.4.1 Requirements ... 15
2.5 Personal protective equipment ... 16
2.6 Occupational safety and special dangers ... 16
2.6.1 Danger symbols on the MHTM™ MicroDrive barrier ... 16
2.6.2 Hazard notes and occupational safety ... 17
2.7 Danger area ... 23
3 Identification ... 24
3.1 Type plate ... 24
3.2 Type code ... 25
4 Technical data ... 26
4.1 Access XL ... 26
4.1.1 Dimensions and weight ... 26
4.1.2 Electrical connection ... 27
4.1.3 Operating conditions ... 27
4.1.4 Operating times ... 27

Contents

4.2 Access XXL ... 28
4.2.1 Dimensions and weight ... 28
4.2.2 Electrical connection ... 29
4.2.3 Operating conditions ... 29
4.2.4 Operating times ... 29
4.3 Control unit ... 30
4.4 Plug-in module "Detector A–B" ... 31
4.5 Plug-in module "Radio" ... 31
5 Design and function ... 32
5.1 Design ... 32
5.2 Function ... 33
6 Transport and storage ... 34
6.1 Safety notes for transport ... 34
6.2 Transport inspection ... 35
6.3 Transport ... 36
6.4 Storage ... 36
7 Design notes for induction loops ... 37
8 Assembly and installation ... 42
8.1 Safety ... 42
8.2 Required steps ... 43
8.3 Foundation and empty conduits ... 44
8.3.1 Foundation and empty conduits for the Access XL barrier ... 45
8.3.2 Foundation and empty conduits for the Access XXL barrier ... 47
8.3.3 Foundation and empty conduits for nesting post or light barrier post ... 50
8.4 Assembly and installation of induction loops ... 52
8.4.1 Directions for the assembly and installation of induction loops ... 52
8.4.2 Induction loops ... 54
8.4.3 Testing induction loops ... 54
8.4.4 Installing induction loops in bitumen, asphalt, or concrete ... 54
8.4.5 Installing induction loops under interlocking stone paving ... 56
8.5 Unpacking ... 57
8.6 Open barrier housing ... 57
8.7 Assemble housing ... 58
8.8 Assemble nesting post or light barrier post ... 60
8.9 Assemble safety light barrier ... 61
8.9.1 Assemble transmitter ... 61
8.9.2 Assemble receiver ... 62

Contents

8.10 Assemble barrier boom 63
8.10.1 Assemble barrier boom up to 6 metres 63
8.10.2 Assemble barrier boom as of 6 metres 66
8.11 Assemble edge protection 71
8.12 Conversion "left version" – "right version" 72
8.12.1 Left and right version 72
8.12.2 Converting barrier boom up to 6 metres 72
8.12.3 Converting barrier boom as of 6 metres 76
8.13 Check and set the balancing springs in the lever system 80
8.13.1 Check setting of balancing springs 81
8.13.2 Setting balancing springs Access XL 82
8.13.3 Setting balancing springs Access XXL 84
8.13.4 Overview table balancing springs Access XL and Access XXL 87
8.13.5 Equipment plan balancing springs Access XL 89
8.13.6 Equipment plan balancing springs Access XXL 90
8.14 Align barrier housing and post 91
8.15 Set nesting post height 91
8.16 Stick on prohibition signs 92
8.17 Check assembly and installation 93

9 Electrical connection 94
9.1 Safety 94
9.2 Installing electrical protective devices 95
9.3 Connecting the power cable 96
9.4 Connect customer's control lines (signalling devices) 98
9.4.1 Connecting safety devices 100
9.4.2 Plausibility check of the safety devices 100
9.4.3 Connecting safety loop 101
9.4.4 Connect and test the safety light barriers 102
9.4.5 Connecting emergency opening contacts 103
9.4.6 Digital inputs 103
9.4.7 Digital outputs and output relays 104
9.5 Checking the electrical connection 104

10 Start-up and operation 105
10.1 Safety 105
10.2 Commissioning 106
10.3 Switching on and off the barrier 107
10.4 Open and close the barrier manually 108
10.5 Putting the barrier temporarily out of operation 109

Contents

11 Cleaning and maintenance 110
11.1 Safety 110
11.2 Cleaning 111
11.3 Cleaning from the outside 111
11.4 Clean barrier housing from the inside 111
11.5 Maintenance schedule 112
12 Malfunctions 114
12.1 Safety 114
12.2 Malfunction table – barrier malfunctions 115
12.3 Event, warning and error messages on the display .. 119
12.3.1 Event, warning and error messages – Logic control (control unit) 120
12.3.2 Event, warning and error messages – Motor GW 122
12.3.3 Event, warning and error messages – Detector 124
12.3.4 Event, warning and error messages – All modules 124
12.4 Reset the barrier 125
12.5 Closing or opening the barrier boom in case of power failure 125
13 Repair 127
13.1 Safety 127
13.2 Spare parts 128
13.3 Replacing the barrier boom 128
14 Decommissioning, disassembly and disposal 129
15 EC-Declaration of conformity 130
15.1 Barrier, pedestrian traffic impossible 130
15.2 Barrier, pedestrian traffic not impossible 132
16 Appendix 134
16.1 Wiring diagram 134
16.1.1 Wiring diagram Access XL 135
16.1.2 Wiring diagram Access XXL 143
Index 151

1 General

1.1 Information regarding the operating instructions

These operating instructions provide crucial information on handling of MAGNETIC barriers MHTM™ MicroDrive. Pre-requisite for safe working is the observance of all specified safety notes and instructions.

In addition, the local accident prevention regulations valid at the barrier's area of application and general safety regulations have to be complied with.

Carefully read the operating instructions before starting any work! They are a product component and must be kept in direct proximity of the barrier, well accessible to the personnel at all times.

When passing the barrier on to third parties, the operating instructions must also be handed over.

Components from other suppliers may have their own safety regulations and instructions for use. These must also be observed.

Parameterisation of the barrier control unit MGC and MGC Pro

NOTE!

For parameterisation of the control units MGC and MGC Pro, see separate document "Description of control units MGC and MGC Pro for MHTM™ MicroDrive barriers (Doc-ID: 5816,0006)".

1.2 Pictogram explanation

Warning notes

Warning notes are characterised by pictograms in these operating instructions. The warning notes are followed by signal words expressing the scale of the hazard.

It is absolutely essential to observe the notes and to proceed with caution in order to prevent accidents as well as bodily injuries and property damage.

⚠ DANGER	
	The signal word DANGER points to an immediately dangerous situation, which leads to death or severe injuries if it is not avoided.

⚠ WARNING	
	The signal word WARNING points to a potentially dangerous situation, which can lead to death or severe injuries if it is not avoided.

⚠ CAUTION	
	The signal word CAUTION points to a potentially dangerous situation, which can lead to minor injuries if it is not avoided.

NOTICE	
	The signal word NOTICE points to a potentially harmful situation, which can lead to property damage if it is not avoided.

Hints and recommendations

NOTE!

…highlights useful hints and recommendations as well as information for an efficient and trouble-free operation.

1.3 Limitation of liability

All specifications and notes in these operating instructions were compiled with consideration to the valid standards and regulations, the state of the art as well as to our long-standing knowledge and experience.

The manufacturer is not liable for damages caused by:

- Non-observance of the operating instructions
- Improper use
- Deployment of non-trained personnel
- Arbitrary modifications
- Technical changes
- Use of non-approved spare and wear parts.

The actual scope of supply may differ from the explanations and illustrations described in this manual in case of special designs, if additional order options are made use of, or due to latest technical changes.

1.4 Copyright protection

Surrendering the operating instructions to third parties without written permission of the manufacturer is not permitted.

NOTE!

Content details, texts, drawings, pictures and other illustrations are protected by copyright and are subject to industrial property rights. Any improper use shall be liable to prosecution.

Any type and form of duplication – also of extracts – as well as the exploitation and/or communication of the contents are not permitted without the manufacturer's written declaration of consent.

1.5 Scope of delivery

The scope of delivery comprises:

- 1 barrier housing
  incl. drive unit and control
- 1 Barrier boom
- 2 Mounting profiles
- 2 Prohibition sign stickers
- Edge protection
- Options if applicable

Supplied documentation per barrier:

- These operating instructions.

1.6 Warranty

Subject to the condition that the operating instructions are observed, and that no inadmissible operations are carried out on the technical equipment, and that the installation has suffered no mechanical damage, MAGNETIC grants a warranty on all mechanical and electrical components of product to the extent as stated in its standard terms of sales and delivery or as contractually agreed in writing.

1.7 Disclaimer

MAGNETIC expressly disclaims all implied and statutory warranties, including but not limited to, the implied warranties of merchantability and fitness for a particular purpose with respect to the product and the statutory warranty of non-infringement of third party rights set forth in section 2312(3) of the uniform commercial code.

1.8 Customer service

Your vendor is available to you for technical information

For the address, see invoice, delivery note or the reverse of these instructions.

NOTE!

In order to enable fast handling note the data of the type plate such as type code, serial number, etc. before calling.

1.9 EC-Declarations of conformity

EC-Declarations of conformity (pursuant to EC Machinery Directive 2006/42/EC, Annex II) see page 130.

1.10 Performance declaration

For the performance declaration according to building product regulation no. 305/2011, see enclosed data carriers.

1.11 Environmental protection

NOTICE	
!	**Danger for the environment by improper disposal of components or the barrier!** In case of improper disposal of components or the barrier, damage to the environment may result. – Observe the local and national laws and directives. – Disassemble barrier according to resources. Sort resources and supply them to recycling.

2 Safety

2.1 Intended use of the barriers

The MAGNETIC MHTM™ MicroDrive barriers are exclusively intended for controlling access to and exit of certain road vehicles in or from certain areas.

The barrier is either controlled by a person in manual operating modes or by access control systems in automatic operating modes and monitored by induction loops and/or safety light barriers.

Electrical energy is used exclusively for operating the barrier. The barrier boom weight is balanced out by spring energy.

The barrier consists of a barrier housing with drive system and control, as well as the barrier boom.

2.1.1 Intended use for certain road vehicles

Certain road vehicles according to chapter 2.1 paragraph 1 need to have sufficiently large metal areas in the vehicle floor area to enable detection by induction loops.

Other or complementary safety facilities must be provided for road vehicles that cannot be detected by induction looks due to the metal area in the vehicle floor area being too small.

Additional safety installations must be provided for motorcycles. For this case such contact the MAGNETIC Service.

2.1.2 Barrier, pedestrian traffic impossible

In vehicle barriers where personal traffic is excluded and use by pedestrians is not intended.

The presence of persons and animals must be excluded by the operator. This shall apply for the following barrier type:

- Access XL with 6 m locking width and fast speed

The opening and closing speed is set via the parameter "Speed".
→ See separate document "Description of control units MGC and MGC Pro for MHTM™ MicroDrive barriers".

2.1.3 Barrier, pedestrian traffic not impossible

In vehicle barriers where personal traffic cannot be excluded and use by pedestrian traffic is intended.

If persons and animals may be present, only the following barriers may be used in connection with MAGNETIC safety PE-beams.

- Access XL with 6 m locking width and slow and medium speed
- Access XXL.

The opening and closing speed is set via the parameter "Speed".
→ See separate document "Description of control units MGC and MGC Pro for MHTM™ MicroDrive barriers".

2.1.4 Non-intended use

Control of pedestrian traffic as contrary to intended use.

The barriers must not be used at railway crossings.

The barriers are not approved for pedestrian traffic, bicycles or animals.

The barriers must not be used in explosive environments.

All uses not described as intended use are prohibited.

No accessories must be connected or installed if they are not specified expressly according to quantity and characteristics and approved by Magnetic Autocontrol.

⚠ WARNING	
	Non-intended use is dangerous! Every non-intended use can lead to dangerous situations. – Only use barrier as intended. – All specifications in these operating instructions have to be strictly complied with.

Any types of claims due to damage arising from improper use are excluded. The operator alone shall be responsible for any damage arising from improper use.

2.2 Operator's responsibility

The operator must comply with the statutory obligations regarding work safety.

In addition to the work safety notes in these operating instructions, the safety, accident prevention and environmental provisions applicable for the area the barrier is used in must be complied with.

In particular, the operator must:

- gather information on applicable work protection provisions.
- determine additional dangers in a risk assessment.
- implement the required method of operation of the barrier on site from the operating instructions.
- regularly verify throughout the barrier's time of use that the operating instructions drawn up by him comply with the current state of the regulations.
- adapt the operating instructions to any new provisions, standards and usage conditions - where required.
- clearly determine the responsibilities for installation, operation, maintenance and cleaning of the barrier.
- ensure that all employees that are working at or with the barrier have read and understood the operating instructions.
- Furthermore, the operator must train personnel regarding the use of the barrier at regular intervals and provide information on possible dangers.

Furthermore, the operator is responsible for:

- keeping the barrier in perfect technical order and condition at all times.
- maintaining the barrier according to the maintenance intervals and performing the safety inspections as stipulated.
- checking all protective facilities for completeness and proper function at regular intervals.

The operator is also responsible that the danger area of the barrier boom cannot be accessed by any unauthorised persons, and in particular not by children, under any circumstances.

2.3 Changes and modifications

Changes, modifications and re-builds of the barrier or installation can cause unforeseen danger.

A written authorisation of the manufacturer is required before executing any technical changes and extensions on the barrier.

2.4 Specialists and operating personnel

2.4.1 Requirements

⚠ WARNING

Risk of injury in case of improper handling!

Improper handling can lead to considerable bodily injuries and property damage.

– Have any activities only carried out by the individuals designated for that purpose.

The operating instructions specify the following qualification requirements for the different fields of activity:

- **Instructed people**
  have been instructed during instructions provided by the operator with regard to the work assigned to them and possible hazards arising from improper conduct.
- **Specialised staff**
  are able, due to their technical training, knowledge and experience as well as their knowledge of the pertinent regulations are able to carry out work assigned to them independently and to recognise potential hazards.
- **Electrical specialists**
  are able, due to their technical training, knowledge and experiences as well as knowledge of the relevant standards and regulations, to execute tasks on electrical systems and to independently recognise possible hazards.
  In Germany, the electrical specialist must comply with the provisions of accident prevention regulation BGV A3 (e.g. master electrical fitter). Appropriate regulations apply in other countries. The regulations valid there must be observed.
- **MHTMTM MicroDrive service experts**
  comply with the requirements of the electricians named here. Additionally, these electricians are trained and authorised by MAGNETIC to perform special repair and service work at MHTM™ MicroDrive barriers.

It must be expected that only those people are deployed who carry out their work reliably. People, whose ability to respond is affected, e.g. by drugs, alcohol or medicines, must not be used. Furthermore, the age and profession-specific regulations valid at the operating location must be observed when selecting personnel.

2.5 Personal protective equipment

It is necessary to wear personal protective equipment when dealing with the barrier so as to minimise health hazards.

Before carrying out any work, properly dress in the necessary protective equipment such as work clothes, protective gloves, safety shoes, helmet and wear during work.

2.6 Occupational safety and special dangers

The remaining risks resulting from the risk analysis are specified in the following section.

Observe the safety notes listed here and the warning notes mentioned in the other chapters of these instructions to reduce health hazards and to avoid dangerous situations.

2.6.1 Danger symbols on the MHTM™ MicroDrive barrier

The relevant dangerous areas on the barriers can be identified by the following pictograms:

Electric voltage

⚠ DANGER	
	Mortal danger by electric voltage! ... indicates life threatening situations caused by electric voltage. Non-observance of the safety instructions causes severe injuries or death. Necessary work may only be carried out by an electrical specialist. This pictogram is fixed on the following component: – Assembly plate in the barrier housing.

Danger of crushing

⚠ WARNING	
	Danger of crushing! … indicates the presence of components and items moving towards each other. Non-observance of the safety instructions can cause severe injuries. This pictogram is fixed on the following component: – At the access points for the lever system on the front and rear of the top assembly plate. – At the access point for the flanged shaft on the front and rear of the top assembly plate.

Hot surfaces

⚠ CAUTION	
	Danger of burns! … indicates the presence of a hot surface. Non-observance of the safety instructions can lead to minor injuries. This pictogram is fixed on the following component: – Motor in the barrier housing. – Heating (optional) in the barrier housing.

2.6.2 Hazard notes and occupational safety

For your own safety and for the protection of the barrier modules, the following information must be observed and complied with:

Electric voltage

⚠ DANGER	
	Mortal danger by electric voltage! Touching live parts can be lethal. Damage to the insulation or to individual components can be lethal. – Switch off the power supply immediately in case of damage to the insulation and arrange repair. – Only electrical specialists may carry out work on the electrical system. – Switch off power supply and secure against reactivation before performing any work. Test for absence of voltage! – Never bypass or deactivate fuses. – When replacing fuses observe the correct amperage specification. – Keep moisture and dust away from live parts. Moisture or dust may cause a short circuit. If the electrical connection is established during precipitation, e.g. rain or snow, penetration of moisture must be prevented by suitable measures, such as a protective cover.

Electric voltage – missing safety installations

DANGER

Mortal danger by electric voltage!

The safety installations that are required according to regional and local regulations must be provided by the customer. Usually these are:

- Residual current device (RCD)
- Circuit-breaker
- Lockable 2-pole main switch according to EN 60947-3.

Thunderstorm, lightning, electric voltage

DANGER

Mortal danger from lightning and electrical voltage!

If lightning strikes the barrier, contact to the barrier components and direct proximity to the barrier includes mortal danger.

- Never install the barrier housing and barrier boom during thunderstorms.
- Protect yourself in buildings or vehicles.

Improper operation

WARNING

Danger from improper operation of the barrier!

Improper operation of the barrier can cause severe or lethal injuries!

- The barrier closes automatically in certain programme modes. Passing of two vehicles within a single opening process must be prevented by the construction and appropriate signs or signals.
- The barrier is intended for a single drive direction at the same time. The operator must prevent concurrent oncoming traffic by suitable measures, such as signs.
- Only additions to the barrier housing or boom that are permitted by the manufacturer may be installed.
- Keep barrier area free from objects.
- Do not use the barrier boom as a lifting device.
- Never climb over or crawl under boom.
- Never sit on the barrier housing or climb over it.
- Do not sit or have yourself lifted by the boom.
- Never open or stop the boom manually.

Entering the danger area of the barrier – Pedestrian traffic possible

⚠ CAUTION

Danger from entering the danger area!

The MAGNETIC MHTM™ MicroDrive barriers are intended exclusively for closing off passages for motor vehicles and trucks. For vehicles that cannot be detected by induction loops, additional safety measures must be provided. If the presence of persons and animals is possible, entering the danger area can cause injuries!

Therefore, the operator must take the following measures:

- Observing country-specific laws and regulations.
- Marking the danger area by prohibition signs for persons, bicycles, etc.

Entering the danger area of the barrier – Pedestrian traffic impossible

⚠ WARNING

Danger from entering the danger area!

The MAGNETIC MHTM™ MicroDrive barriers are intended exclusively for closing off passages for motor vehicles and trucks. For vehicles that cannot be detected by induction loops, additional safety measures must be provided. Entering the danger area can cause severe or lethal injuries!

Therefore, the operator must take the following measures:

- Observing country-specific laws and regulations.
- Presence of persons and animals must be excluded.
- Marking the danger area by prohibition signs for persons, bicycles, etc.
- If required, set up barriers such as fences and railings.
- If required, set up separate passageway for persons and bicycles.

Closing boom

⚠ WARNING

Danger from closing boom!

A closing boom may cause severe or lethal injury to persons, bicyclers, cabriolet drivers and motorcycle drivers!

- Install safety installations, such as a MAGNETIC safety light barrier as surveillance device. The surveillance device must prevent the closing of the barrier in case a person or a vehicle is standing below the barrier.
- Only use barrier booms approved of by MAGNETIC.
- Assemble edge protection.
- If the edge protection was damaged it must be replaced immediately or the barrier must be taken out of operation.

Improper transport

⚠ WARNING

Danger from improper transport of the barrier boom and housing!

The weight of the barrier boom or housing can severely injure a person!

- Have them transported by specialists only.
- Use lifting gear or forklift with a suitable pallet.
- Use suitable lifting gear (loops, etc.) for lifting the barrier boom and barrier housing. The lifting gear must be designed for the respective weights.
- Carrying and lifting the barrier boom and housing from the pallet should be done by at least two people.

Heavy weight

⚠ WARNING

Risk of injury when lifting heavy objects alone!

The weight of heavy objects can severely injure a person!

- Lifting and carrying the barrier boom and housing from the pallet should be done by a minimum of two people.

Falling components

⚠ WARNING

Risk of injury from falling components!

Falling components such as the barrier boom can cause severe injury!

- Only place the barrier boom horizontally.
- Only install the barrier boom when there is no or little wind.
- Secure the barrier housing against tilting before assembly.
- Install the barrier housing correctly.

Insufficient fixing

⚠ WARNING

Risk of injury at insufficient fixing!

Insufficient fixing of individual components such as barrier housing, barrier boom and additions permitted by the manufacturer can cause severe injury!

- Only qualified and skilled personnel are allowed to assemble the barrier and the appropriate components.
- Check the foundation anchors fit tightly before starting the barrier.
- Check the firm fixing of all screws according to maintenance schedule.

Danger of crushing, lever system and flange shaft

⚠ WARNING

Danger of crushing at opened barrier housing at the lever system and flange shaft!

The lever system and the flange shaft in the barrier housing can cause serious crushing injuries!

- Only skilled personnel are allowed work on the barrier housing and barrier boom.
- Only work at the barrier housing when the power supply is turned off.
- Assemble barrier housing without barrier boom.
- For assembly of the barrier boom, strictly observe the descriptions in chapter 8.10.
- Wear protective gloves if necessary.

Danger of crushing, barrier boom and flange

⚠ WARNING

Danger of crushing between barrier boom and barrier housing!

Moving parts may cause serious crushing injuries!

- Only skilled personnel are allowed work on the barrier housing and barrier boom.
- Only work at the barrier housing when the power supply is turned off.
- For assembly of the barrier boom, strictly observe the descriptions in chapter 8.10.

Illegible signage

⚠ CAUTION

Risk of injury by illegible symbols!

Labels and signs can become dirty or unrecognisable in the course of time.

- Always keep safety, warning and operating notes in a good readable condition.
- Immediately renew damaged or unrecognisable signs or labels.

2.7 Danger area

Danger of crushing and shearing, barrier boom

⚠ WARNING

Danger of crushing and shearing if the safety distance between the barrier boom and other objects is too low!

A closing or opening barrier boom can cause severe injuries from crushing if the safety distance to other objects is too low!

– Keep a safety distance of at least 500 mm between the barrier boom and other objects, such as walls, masonry or houses.

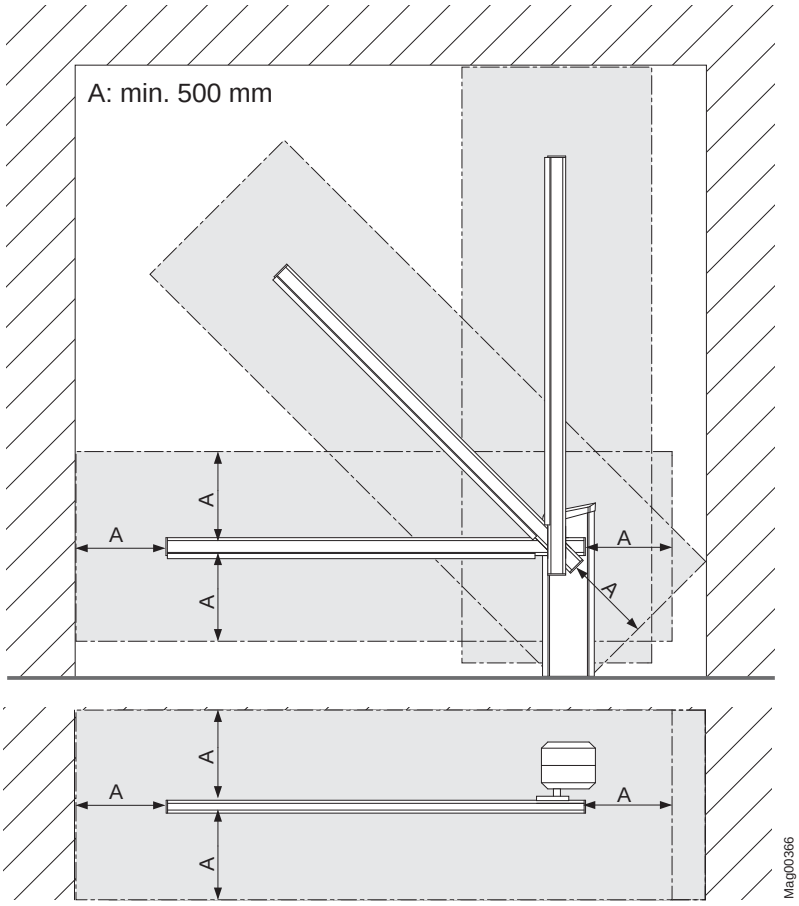

Fig. 1: Danger area, here Access XL

A Danger area of 500 mm

3 Identification

3.1 Type plate

The type plate is provided inside at the barrier housing, next to the hood attachment.

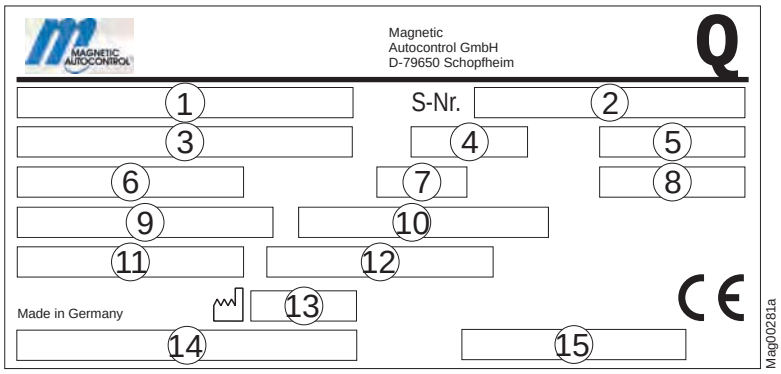

Fig. 2: Type plate

1 *Type code*
2 *Serial number*
3 *Power supply, Frequency*
4 *Current consumption*
5 *Power consumption*
6 *Operating time (Opening time/closing time)*
7 *Protection class*
8 *Duty cycle*
9 *Wind load classification (only for barrier where pedestrian traffic is possible)*
10 *EN13241: Gates – Product standard part 1 (only for barriers for pedestrian traffic)*
11 *Number of performance declaration*
12 *Product classification, here "Power operated barrier"*
13 *Manufacturing year and month*
14 *Bar code for type code*
15 *Bar code for serial number*

3.2 Type code

												–	R	A	0	3	0	0	0
1	2	3	4	5	6	7	8	9	10	11	12	13	14	15	16	17	18	19	20

Position	Description
1 – 12	Product group: ACCESS XL Magnetic.Access XL ACCESS XXL Magnetic.Access XXL
13	–
14	L = Left version R = Right version
15	A = Standard wide range 85 – 264 V AC / 47 – 63 Hz C = UL-version (US market)
16 – 18	Lane width Standard length: 060 = 6,0 metre 070 = 7,0 metre 085 = 8,5 metre 090 = 9,0 metre (ACCESS XXL only) 100 = 10,0 metre (ACCESS XXL only)
19	Colours 0 = Top cover: RAL 2000 (Orange) Housing: RAL 2000 (Orange) Doors: Similar to RAL 7021 (Black-grey) X = Special coats of paint
20	0

4 Technical data

4.1 Access XL

4.1.1 Dimensions and weight

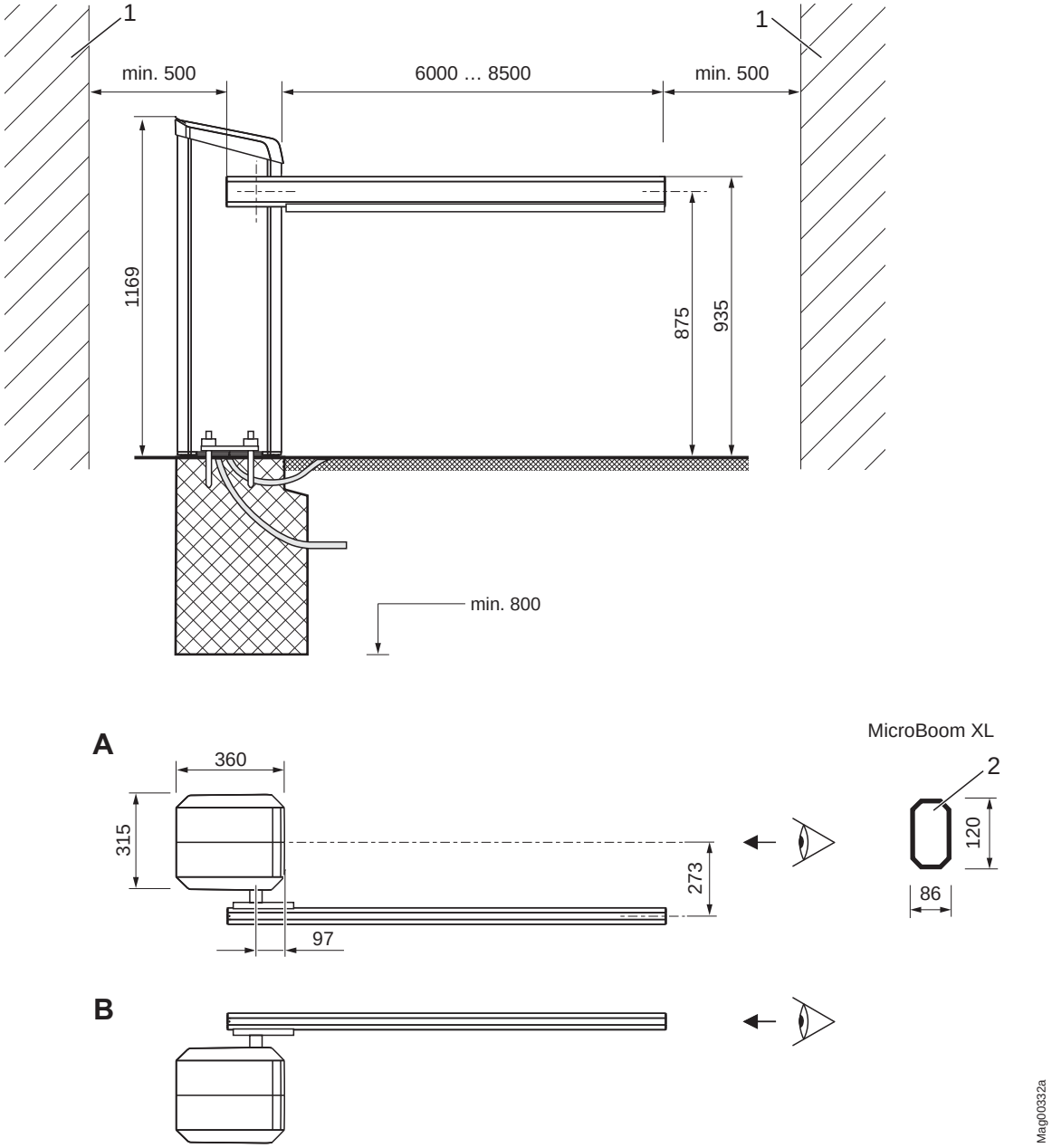

Fig. 3: Dimensions barrier system and barrier boom profile – "Access XL" series (dimensions in mm)

1 Object such as wall, building, etc.
2 MicroBoom-XL (barrier boom) with octagon boom profile

A Barrier, left version
B Barrier, right version

Designation	Unit	Access XL
Lane width [1)]		6000 to 8500
Barrier housing (width x depth x height)	mm	→ See page 26, Fig. 3. (315 x 360 x 1169)
Barrier housing weight	kg	93

1) Starting at a lane width of 6 m, a pendulum support or nesting post is required.

Table 1: Dimensions and weight – "Access XL" series

4.1.2 Electrical connection

Designation	Unit	Access XL
Supply voltage	V AC	85 to 264
Frequency	Hz	50 / 60
Max. current consumption [1)]	A	0.3
Max. power consumption [1)]	W	35
Duty cycle	%	100

1) The values refer to power supply of 230 V AC / 50 Hz and without accessories.

Table 2: Electrical connection – "Access XL" series

4.1.3 Operating conditions

Designation	Unit	Access XL
Ambient temperature	°C	–30 to +55
Storage temperature	°C	–30 to +70
Relative humidity	%	max. 95 %, non-condensing
Wind force	Bft (Beaufort)	up to 6 m with nesting post: 12 up to 6 m with pendulum support: 10 up to 8.5 m with nesting post: 11 up to 8.5 m with pendulum support: 9
Protection class barrier housing	–	IP 54

Table 3: Operational conditions - "Access XL" series

4.1.4 Operating times

Designation	Unit	Access XL
Opening time/ closing time	s	6

Table 4: Operating times – "Access XL" series

4.2 Access XXL

4.2.1 Dimensions and weight

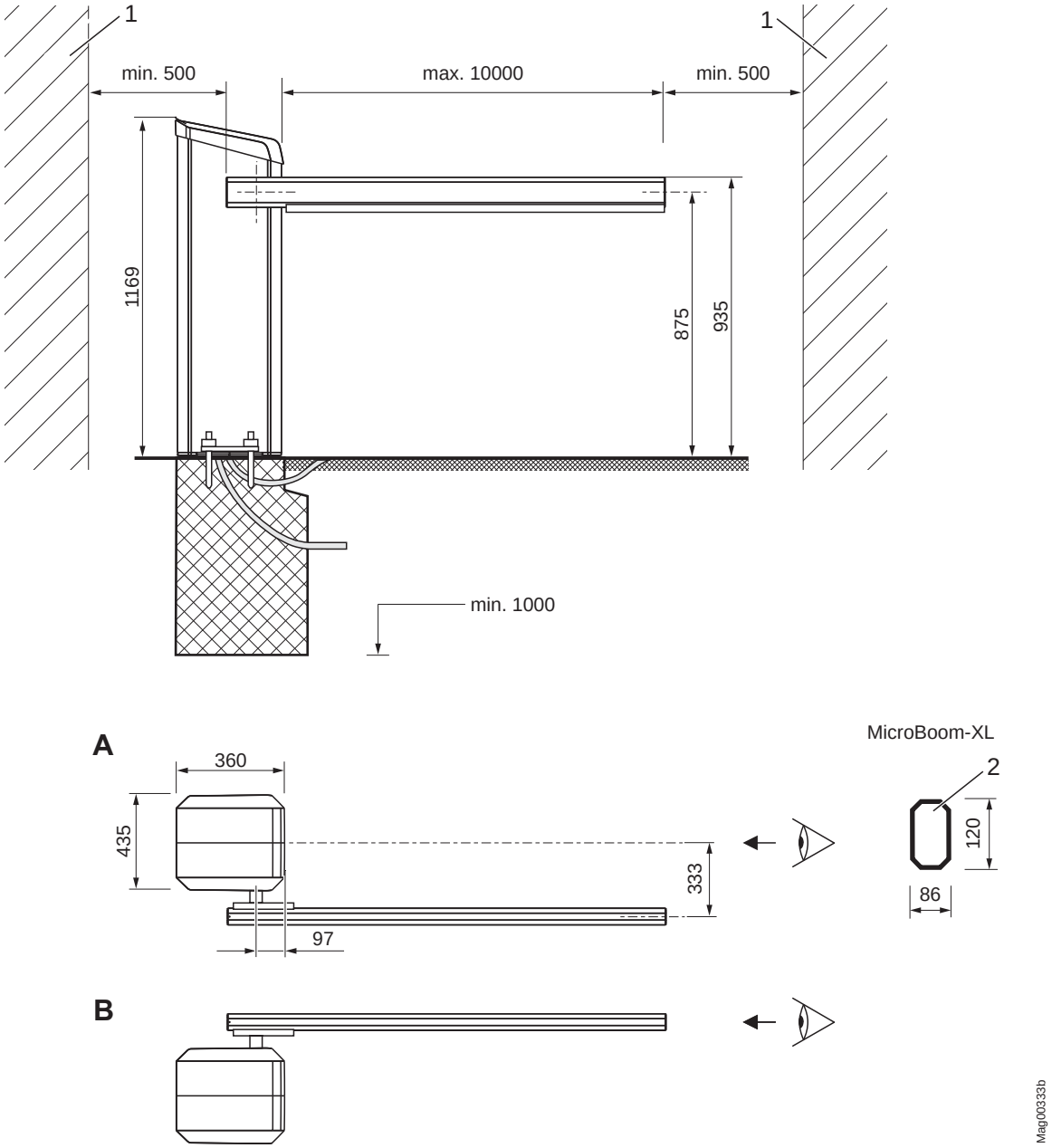

Fig. 4: Dimensions barrier system and barrier boom profile – "Access XXL" series (dimensions in mm)

1 Object such as wall, building, etc.
2 MicroBoom-XL (barrier boom) with octagon boom profile

A Barrier, left version
B Barrier, right version

Designation	Unit	Access XXL
Lane width [1)]		6000 to 10000
Barrier housing (width x depth x height)	mm	→ See page 28, Fig. 4. (435 x 360 x 1169)
Barrier housing weight	kg	112

1) Starting at a lane width of 6 m, a pendulum support or nesting post is required.

Table 5: Dimensions and weight – "Access XXL" series

4.2.2 Electrical connection

Designation	Unit	Access XXL
Supply voltage	V AC	85 to 264
Frequency	Hz	50 / 60
Max. current consumption [1)]	A	0.3
Max. power consumption [1)]	W	35
Duty cycle	%	100

1) The values refer to power supply of 230 V AC / 50 Hz and without accessories.

Table 6: Electrical connection – "Access XXL" series

4.2.3 Operating conditions

Designation	Unit	Access XXL
Ambient temperature	°C	–30 to +55
Storage temperature	°C	–30 to +70
Relative humidity	%	max. 95 %, non-condensing
Wind force	Bft (Beaufort)	up to 6 m with nesting post: 12 up to 6 m with pendulum support: 10 up to 8,5 m with nesting post: 11 up to 8,5 m with pendulum support: 9
Protection class barrier housing	–	IP 54

Table 7: Operational conditions - "Access XXL" series

4.2.4 Operating times

Designation	Unit	Access XXL
Opening time/ closing time	s	8

Table 8: Operating times – "Access XXL" series

4.3 Control unit

Designation		Unit	MGC (MAGNETIC Gate Controller)
Supply voltage		V DC	24
Current consumption		–	max. 1 A max. 300 mA + current consumption of the different plug-in modules
Power consumption		–	max 24 W. Max. 7.2 W + power consumption of the different plug-in modules
Control unit safety		–	1 A T
Output clamp X2	Output voltage	V DC	24
	Max. output current	mA	300
Digital inputs	Number	–	8
	Input voltage	V DC	24 ± 10 %
	Input current	–	< 10 mA per input
	Max. line length without overvoltage module [1)]	m	30
Digital outputs	Number	–	4 (open collector)
	Switching voltage	V DC	24 ± 10 %
	Max. switching current	mA	100
	Max. line length without overvoltage module [1)]	m	30
Output relay	Number	–	3 normally-open contacts and 3 change-over contacts, isolated
	Max. switching voltage	V AC / DC	30
	Switching current	mA	10 mA to 1 A
	Max. line length without overvoltage module [1)]	m	30
Display		–	Graphics display, 128 x 65 Pixel
Language display		–	Selectable: German, English, French, Spanish, Italian, Portuguese, Swedish, Finnish, Norwegian, Danish, Estonian, Dutch
Number of slots for plug-in modules		–	5

1) For line lengths exceeding 30 m, overvoltage modules must be installed in front of the terminal clamps.

Table 9: Control unit

4.4 Plug-in module "Detector A–B"

Designation	Unit	Plug-in module "Detector A–B"
Current consumption	mA	50
Number of loop detectors	–	2 (A and B)
Inductance range	µH	70 to 500
Number of induction loop sensitivity levels	–	10 levels
Response sensitivity induction loop	%	Selectable: 0.01 to 2.0

Table 10: Plug-in module "Detector A–B"

4.5 Plug-in module "Radio"

Designation	Unit	Plug-in module "Radio"
Current consumption	mA	20
Frequency hand transmitter	MHz	433
HF modulation	–	FM/AM (depending on region)

Table 11: Plug-in module "Radio"

5 Design and function

5.1 Design

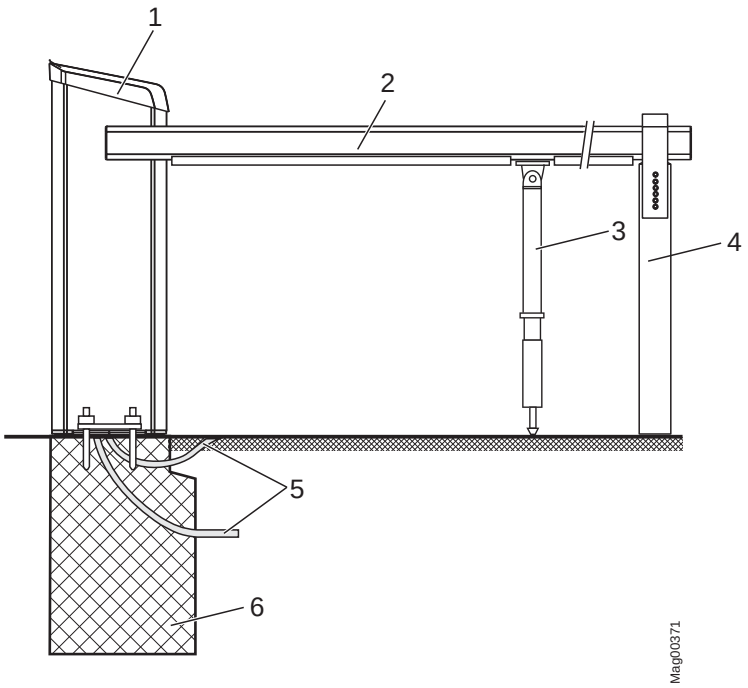

Fig. 5: Barrier system design
Series "Access XL" and Series "Access XXL"

Starting at a lane width of 6 m, a pendulum support or nesting post is required.

1 Barrier housing
2 MicroBoom-XL (barrier boom)
3 Pendulum support from 3.5 m barrier boom length (accessory)
4 Nesting post (accessory)
5 Empty conduits for mains cable, control lines and induction loop
6 Concrete foundation with reinforcement

5.2 Function

The barrier consists of a barrier housing with drive system and a barrier boom.

The drive system consists of an electric motor, control unit, and the lever system. The lever system locks the barrier boom in both end positions. In case of power outage, the barrier boom can easily be moved by hand. Integrated balancing springs in the lever system balance out the boom weight exactly. These balancing springs are pre-set in the factory.

Sensors integrated in the motor supply exact data on every correct position of the barrier boom and thus serve the control unit to control the best acceleration and deceleration.

Safety facilities like induction loops or safety light barriers must be installed on site in all cases. The safety installations must ensure that the barrier closes only after the vehicle has passed through. Safety installations, such as induction loops can be purchased from MAGNETIC. The safety light barriers must be MAGNETIC ones.

6 Transport and storage

6.1 Safety notes for transport

Improper transport

WARNING	
	Danger from improper transport of the barrier boom and housing! The weight of the barrier boom or housing can severely injure a person! – Have all transport work performed by specialists only. – Use lifting gear or forklift with a suitable pallet. – Use suitable lifting gear (loops, etc.) for lifting the barrier boom and barrier housing. The lifting gear must be designed for the respective weights. – Lifting and carrying the barrier boom and housing from the pallet should be done by a minimum of two people.

Heavy weight

WARNING	
	Risk of injury when lifting heavy objects alone! The weight of heavy objects can severely injure a person! – Lifting and carrying the barrier boom and housing from the pallet should be done by a minimum of two people.

Improper transport

NOTICE

The barrier system can be damaged by improper transport!

Substantial material damages can result from improper transport.

- Have all transport work performed by specialists only.
- When unloading the packages and during in-plant transportation always proceed with greatest care and caution.
- Observe the symbols on the packaging.
- Observe the dimensions of the barrier system.
- Loading, unloading as well as moving the barrier system must take place with greatest care.
- Only remove packaging directly before assembly.

Personal protective equipment

The following must be worn during all transport work:

- Work clothes
- Protective gloves
- Safety shoes
- Protective helmet.

6.2 Transport inspection

Immediately check the delivery after receipt for completeness and transport damages.

Proceed as follows in the case of outwardly recognisable transport damage:

- Do not accept the delivery or only under reserve.
- Note the extent of damage on the transport documents or on the delivery note of the forwarder.
- Lodge complaint.

NOTE!

Lodge a complaint for each defect, as soon as it is recognised. Compensation claims can only be submitted within the valid complaint periods.

6.3 Transport

Barrier housing and barrier boom are delivered separately.

The lifting gear must be designed for the weight of the barrier housing and barrier boom.

For transport barrier modules refer to the safety notes on page 34, chapter 6.1.

For future transports:

- Secure loose cables.
- Secure against vibrations.
- Securely fasten the barrier housing and barrier boom prior to transport (e.g. screw it onto a pallet).
- Transport and put down barrier housing and barrier boom with a forklift and lift with suitable lifting gear.

6.4 Storage

Store the barrier or packages under the following conditions:

- Do not store outdoors.
- Store dry and dust free.
- Do not expose to aggressive media.
- Protect against solar irradiation.
- Avoid mechanical vibrations.
- Storage temperature:–30 to +70 °C
- Relative humidity: max. 95 %, non-condensing
- Check the general condition of all components and packaging regularly, if they are stored for longer periods than 3 months.

7 Design notes for induction loops

→ For assembly and inspection, see page 52, chapter 8.4.

Please observe following points when dimensioning the induction loops:

- Induction loops respond only to metal. The mass is thereby not important, but the size of the loop's surface, which will be covered by the metal part is.
- The induction loops must not respond to persons or objects with a small metal portion like a bicycle for instance.
- Motorcycles can be detected with appropriately installed induction loops. However, the induction loops are not a sufficient safety installation for motorcycles. Additional safety equipment, such as light barriers, light curtains etc. must be installed.
- Safety loops must secure the danger area underneath the barrier boom throughout the entire length.
- Opening loops must be installed right in front of the safety loop. The maximum distance between safety loop and opening loop must be not greater than max. 1.0 m.

Arrangement of lorry loops

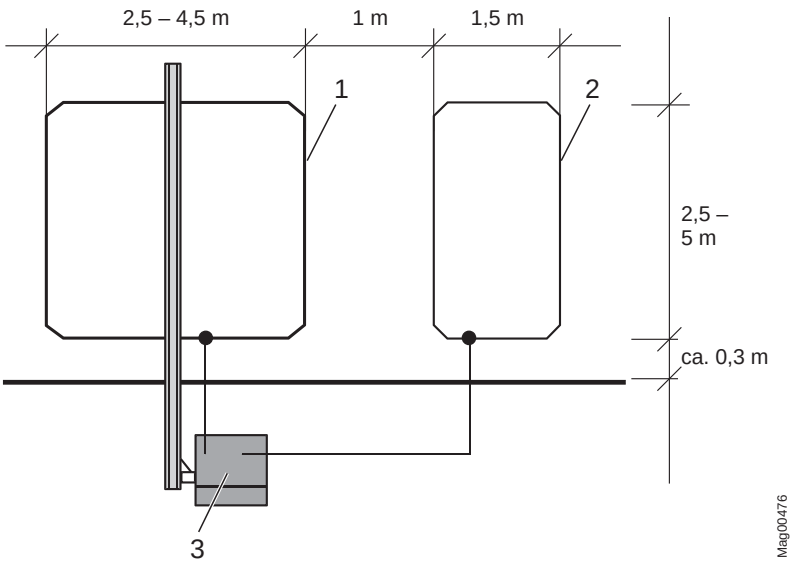

Fig. 6: Lorry loops

1 Safety loop
2 Opening loop
3 Barrier

For lorry passages the safety loop in the direction of travel must be at least 2.5 m long.

Arrangement of lorry looks at longer barrier booms

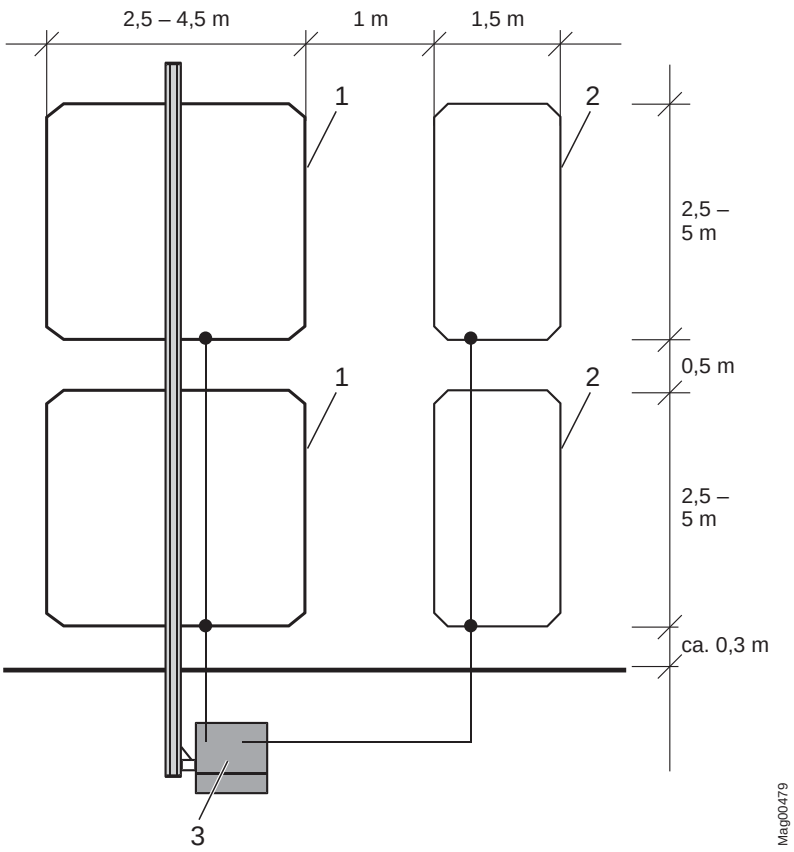

Fig. 7: Lorry looks at longer barrier booms

1 Safety loop
2 Opening loop
3 Barrier

Arrangement of passenger car loops – passage with long opening loop

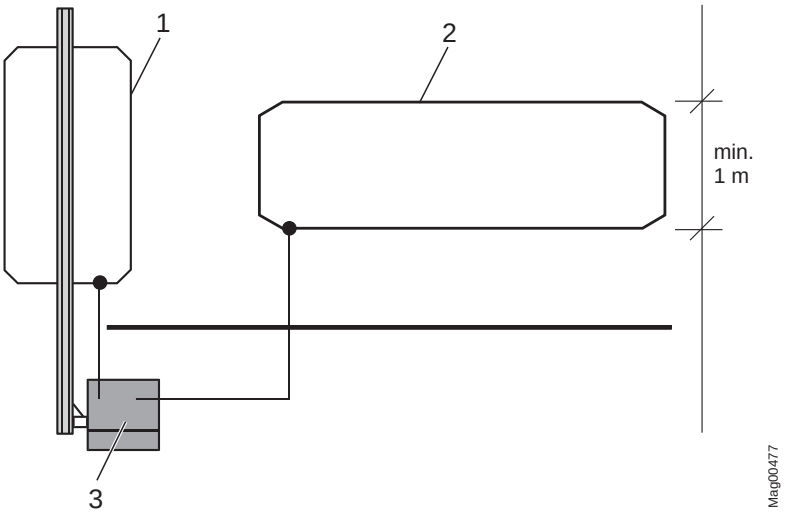

Fig. 8: Passenger car loops – passage with long opening loop

1 Safety loop
2 Opening loop
3 Barrier

Due to a long opening loop vehicles can drive through without needing to stop.

Arrangement of lorry/ passenger car loops

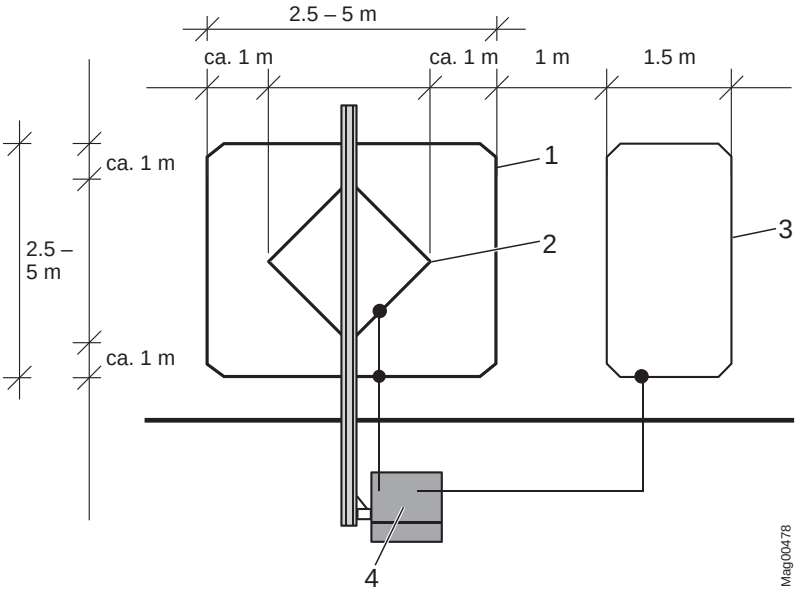

Fig. 9: Lorry/passenger car loops

1 Safety loop lorry (inductance "L1")
2 Safety loop passenger car (inductance "L2")
3 Opening loop lorry and passenger car
4 Barrier

Observe overall inductance "L_{total}". For calculation, see page 41.

Design notes for induction loops

Arrangement of lorry/ passenger car loops at longer barrier booms

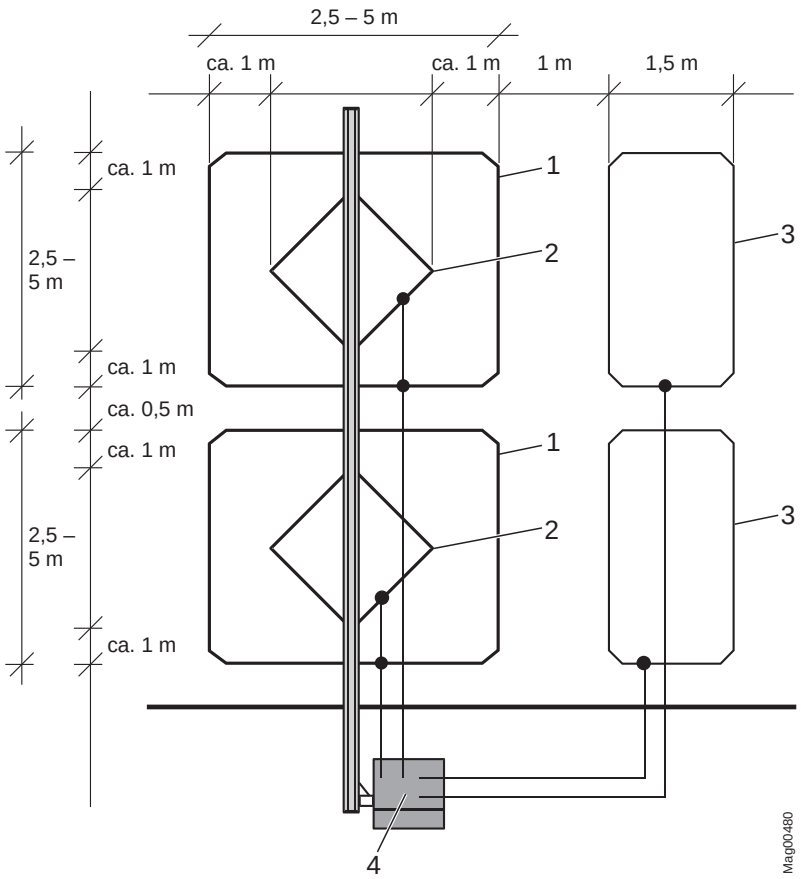

Fig. 10: Lorry/passenger car loops at longer barrier booms

1 Safety loop lorry (inductance "L1")
2 Safety loop passenger car (inductance "L2")
3 Opening loop lorry and passenger car
4 Barrier

Observe overall inductance "L_{total}". For calculation, see page 41.

NOTE!

For this application case, we recommend and additional detector plug-in module to put one loop pair (lorry and car) on one detector each. The complete inductance must not exceed 500 µH.

For combined truck/passenger car loops following points must be additionally observed:

- The winding direction of the inner safety loop for passenger cars must be identical to the outer safety loop for trucks. Meaning, the sensitivity in the middle between outer and inner loop is then at its maximum.
- Outer and inner loop must be both connected to one detector channel.
- The overall inductance determines, whether the truck and the passenger car loop have to be implemented as series or as parallel circuit. Always lead both feed lines into the barrier housing. The overall inductance must be between 70 and 500 µH.

Calculation of the overall inductance for series circuits

$$Ltotal = L1 + L2$$

Calculation of the overall inductance for parallel circuits

$$Ltotal = \frac{L1 \bullet L2}{L1 + L2}$$

NOTE!

For special cases such as loops for motorcycles, contact the MAGNETIC Service.

8 Assembly and installation

8.1 Safety

→ See also safety notes on page 16, chapter 2.6 "Occupational safety and special dangers".

General

⚠ WARNING

Danger by inappropriate installation!

Inappropriate installation can cause severe injuries!

- Only specialist personnel or electrical specialists must perform any assembly and installation tasks.
- Prior to work, ensure that there is sufficient assembly space.
- Pay attention to tidiness and cleanness at the assembly site! Loosely stacked or lying around components and tools are accident sources.
- Comply with specifications for foundations and reinforcement.
- Ensure correct arrangement and fit on all assemblies and components.
- Install the indicated fastening elements correctly.

Danger of crushing and shearing, barrier boom

⚠ WARNING

Danger of crushing and shearing if the safety distance between the barrier boom and other objects is too low!

A closing or opening barrier boom can cause severe injuries from crushing if the safety distance to other objects is too low!

- Keep a safety distance of at least 500 mm between the barrier boom and other objects, such as walls, masonry or houses. → See page 23, chapter 2.7.
- Assemble and install barrier system according to Fig. 11.

Personal protective equipment

The following must be worn during all assembly and installation work:

- Work clothes
- Protective gloves
- Safety shoes
- Protective helmet.

8.2 Required steps

The following steps are to be completed prior to assembly and installation:

- Laying the foundation with reinforcement for the barrier and install empty conduits.
- Set up foundation for nesting post or light barrier post and empty conduits.
- Installing induction loops.

The following procedures have to be observed during assembly and installation:

- Unpack barrier and accessories.
- Mount barrier housing on the foundation.
- Mount nesting post or light barrier post on the foundation.
- Mount safety light barrier.
- Assemble barrier boom (of 6 metres).
- Mount edge protection.
- Mount barrier boom.
- Adjust balancing springs.
- Align barrier housing and nesting post or light barrier post.
- Set nesting post height.
- Assemble and install signalling device.
- Arrange electrical connections.
  → See page 94, chapter 9.

8.3 Foundation and empty conduits

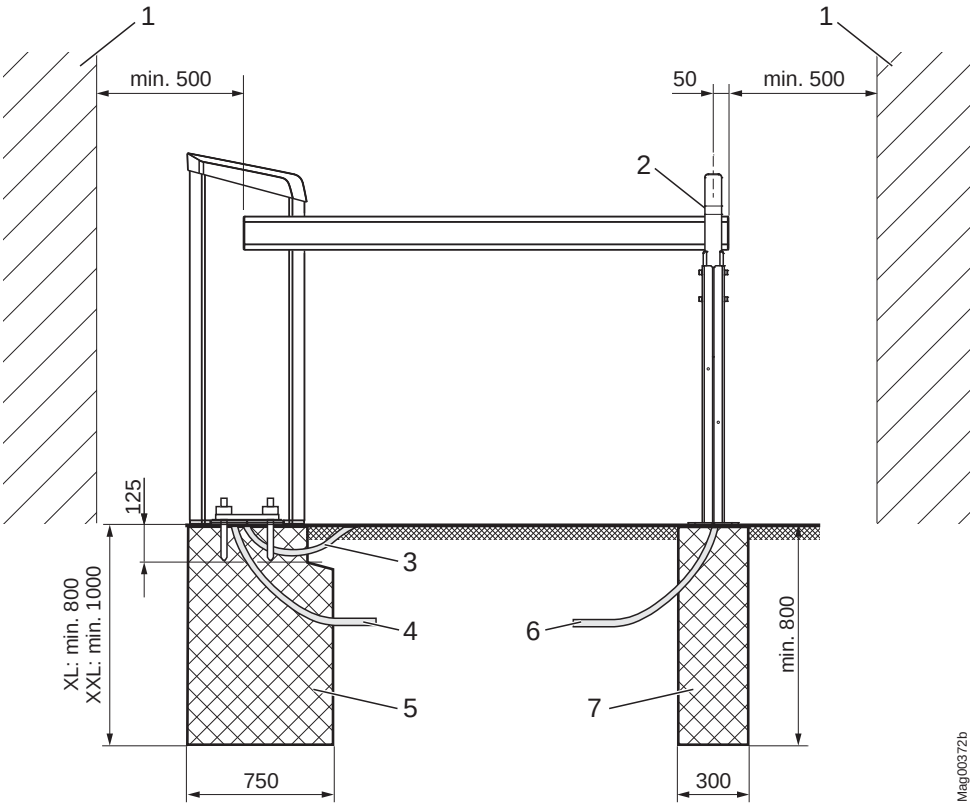

Fig. 11: Assembly boom system (dimensions in mm)

1 *Object like wall, building, etc.*
Keep a safety distance of at least 500 mm between the barrier boom and other objects, such as walls, masonry or houses

2 *Posts, e.g. nesting posts, place post centre at a distance of 50 mm to the barrier boom tip*

3 *Empty conduit for induction loop connection*

4 *One empty conduit each for mains cable and control lines*

5 *Foundation with reinforcement grid for barrier housing*

6 *Optional: Empty conduit for safety light barriers, connection line receiver*

7 *Optional: Foundation for nesting post or light barrier post, nesting post displayed here*
From a lane width of 6 metres, a pendulum support or nesting post is required.

8.3.1 Foundation and empty conduits for the Access XL barrier

Assembly site

The assembly site must meet the following requirements:

- The barrier must not be put up where there is a danger of flooding.
- Keep a safety distance of at least 500 mm between the barrier boom and other objects, such as walls, masonry or houses.
  → See page 44, Fig. 11.

Foundation and reinforcement

The foundation must meet the following requirements:
→ See page 44, Fig. 11 and page 46, Fig. 12.

- have sufficient load-carrying capacity.
  (concrete foundations: C35/45 XD3 XF2)
- Water cement value: 0.5
- Foundation depth: at least 800 mm, frost-protected foundation depth to be adjusted to the local situation.
- Foundation section: 750 mm x 750 mm
- Reinforcing grid as shown in Fig. 13.

Empty conduits

The empty conduits must meet the following requirements:
→ See page 46, Fig. 12.

- Separate empty conduits for mains cable and control lines.
  Diameter: 29 mm each
- Optional empty conduit for induction loop.
  Diameter: 29 mm each
- Conduits have to be planned to a sufficient length.

NOTE!

To provide a trouble-free operation use separate conduits for control lines and mains cable.

Access XL – Laying the foundation, Installing empty conduits

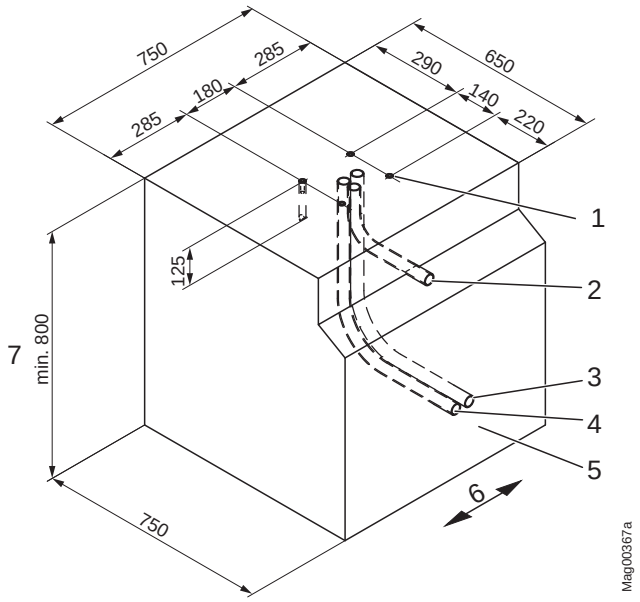

Fig. 12: Foundation plan Access XL (dimensions in mm)

1 *Bores for foundation anchors (4 pcs.)*
2 *Optional when using loop connection; empty conduit for loop connection, diameter: 29 mm*
3 *Empty conduit for induction loop, Diameter: 29 mm*
4 *Empty conduit for control lines, Diameter: 29 mm*
5 *Concrete foundations (C35/45 XD3 XF2)*
6 *Carriageway*
7 *Foundation depth: at least 800 mm, frost-protected foundation depth to be adjusted to the local situation.*

1. Dig foundation hole pursuant to Fig. 11 and Fig. 12.

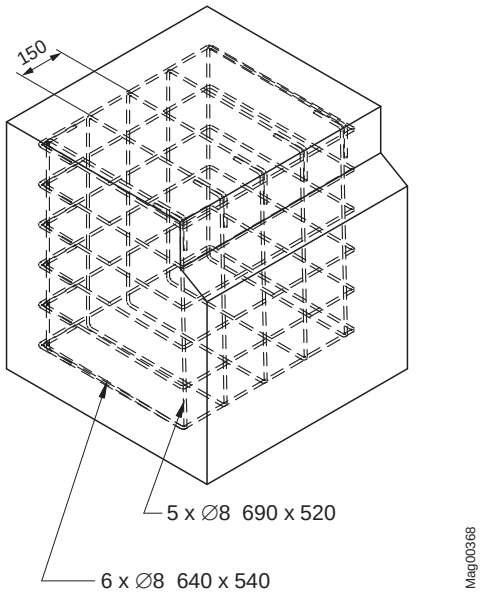

Fig. 13: Reinforcement grid Access XL (dimensions in mm)

2. Place reinforcement grid pursuant to Fig. 13 in the foundation hole.
3. Place empty conduits pursuant to Fig. 12 in the foundation hole.
4. Close empty conduits to prevent water from entering.
5. Fill concrete foundation pursuant to Fig. 12.
6. Create flat line in the base area. The following requirements must be fulfilled:
   - Level and horizontal.
   - Surface deviation: max. 2 mm/m²
7. Let concrete cure.
8. Apply moisture protection agent to concrete surface.

NOTE!

We recommend applying moisture protection either in the form of sealing sludge such as 1100 Hansit or ready-made solution such as Sikagard® 703 W or deepry® to the concrete surface before housing assembly. Moisture protection prevents entering of moisture into the housing from the concrete floor.

8.3.2 Foundation and empty conduits for the Access XXL barrier

Assembly site

The assembly site must meet the following requirements:

- The barrier must not be put up where there is a danger of flooding.
- Keep a safety distance of at least 500 mm between the barrier boom and other objects, such as walls, masonry or houses.
  → See page 44, Fig. 11.

Foundation and reinforcement

The foundation must meet the following requirements:
→ See page 44, Fig. 11 and page 48, Fig. 14.

- have sufficient load-carrying capacity.
  (concrete foundations: C35/45 XD3 XF2)
- Water cement value: 0.5
- Foundation depth: at least 1000 mm, frost-protected foundation depth to be adjusted to the local situation.
- Foundation section: 750 mm x 750 mm
- Reinforcing grid as shown in figure Fig. 15

Empty conduits

The empty conduits must meet the following requirements:
→ See page 48, Fig. 14

- Separate empty conduits for mains cable and control lines.
  Diameter: 29 mm each
- Optional empty conduit for induction loop.
  Diameter: 29 mm each
- Conduits have to be planned to a sufficient length.

NOTE!

To provide a trouble-free operation use separate conduits for control lines and mains cable.

Access XXL - Laying the foundation, Installing empty conduits

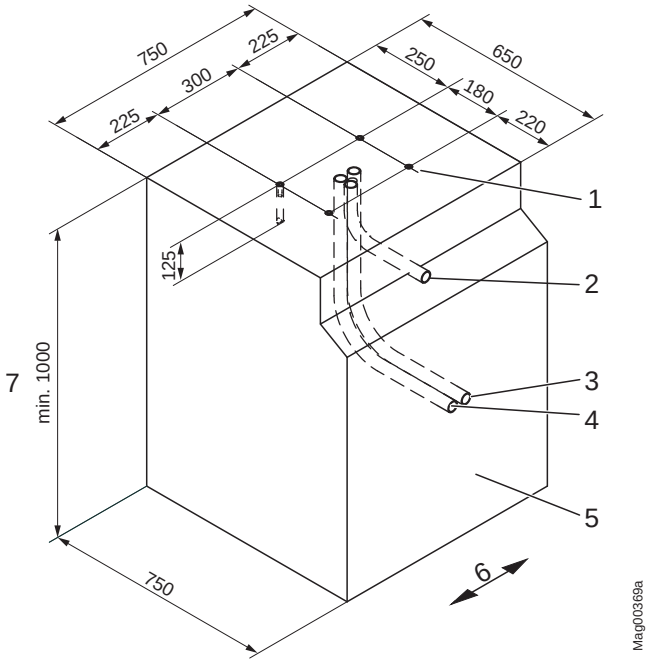

Fig. 14: Foundation plan Access XXL (dimensions in mm)

1 *Bore for foundation anchors (4 pcs.)*
2 *Optional when using loop connection; empty conduit for loop connection, diameter: 29 mm*
3 *Empty conduit for induction loop, Diameter: 29 mm*
4 *Empty conduit for control lines, Diameter: 29 mm*
5 *Concrete foundations (C35/45 XD3 XF2)*
6 *Carriageway*
7 *Foundation depth: at least 1000 mm, frost-protected foundation depth to be adjusted to the local situation.*

1. Dig foundation hole pursuant to Fig. 11 and Fig. 14.

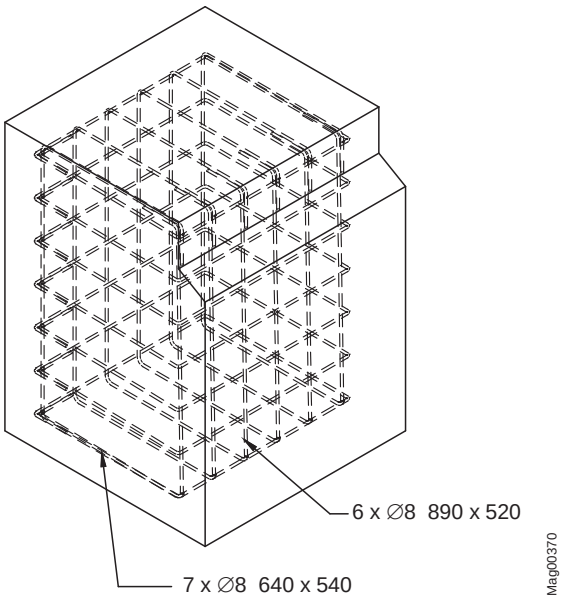

Fig. 15: Reinforcement grid Access XXL (dimensions in mm)

2. Place reinforcement grid pursuant to Fig. 15 in the foundation hole.
3. Place empty conduits pursuant to Fig. 14 in the foundation hole.
4. Close empty conduits to prevent water from entering.
5. Fill concrete foundation pursuant to Fig. 14.
6. Create flat line in the base area. The following requirements must be fulfilled:
   - Level and horizontal.
   - Surface deviation: max. 2 mm/m²
7. Let concrete cure.
8. Apply moisture protection agent to concrete surface.

NOTE!

We recommend applying moisture protection either in the form of sealing sludge such as 1100 Hansit or ready-made solution such as Sikagard® 703 W or deepry® to the concrete surface before housing assembly. Moisture protection prevents entering of moisture into the housing from the concrete floor.

8.3.3 Foundation and empty conduits for nesting post or light barrier post

Danger of crushing

⚠ CAUTION

Crushing danger between the fork at the nesting post and the barrier boom!

Fingers and hands can be crushed when the barrier boom runs into the nesting post when closing.

– Switch off power supply during assembly.
– Do not hold on to fork from the inside. Wear safety gloves if required.

Dimensions

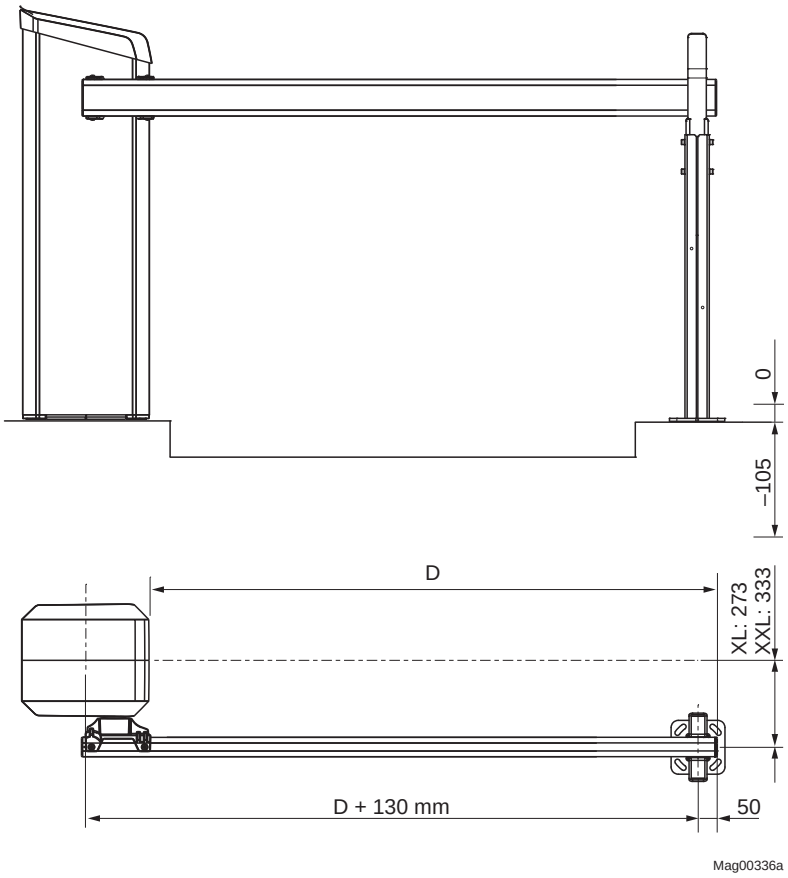

Fig. 16: Dimensions barrier housing – post (dimensions in mm)

Assembly site

- The nesting post and light barrier post must not be put up where there is a danger of flooding.
- Place post centre at a distance of 50 mm from the barrier boom tip. → See page 50, Fig. 16.

Foundation

The foundation must meet the following requirements:
→ See page 44, Fig. 11 and page 51, Fig. 17.

- Have sufficient load-carrying capacity.
  (concrete foundations: C35/45 XD3 XF2)
- Water cement value: 0.5
- Foundation depth: at least 800 mm, frost-protected foundation depth to be adjusted to the local situation.
- Foundation section: 300 mm x 300 mm

Empty conduit

If the barrier system is equipped with a light barrier, an empty conduit must be installed for the transmitter connection line. Conduits have to be planned to a sufficient length.

Laying the foundation, Installing empty conduits

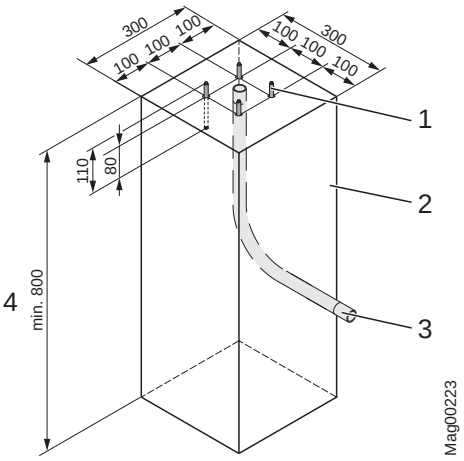

Fig. 17: Foundation plan for nesting post and light barrier post (dimensions in mm)

1 Foundation anchor (4 pcs.)
2 Concrete foundations (C35/45 XD3 XF2)
3 Optional for light barriers:
Empty conduit for transmitter connection line
4 Foundation depth: at least 800 mm, frost-protected foundation depth to be adjusted to the local situation.

1. Dig foundation hole pursuant to Fig. 11 and Fig. 17.
2. Place empty conduit pursuant to Fig. 17 in the foundation hole.
3. Close empty conduit to prevent water from entering.
4. Fill concrete foundation pursuant to Fig. 17.
5. Create flat line in the base area. The following requirements must be fulfilled:
   - Level and horizontal.
   - Surface deviation: max. 2 mm/m²
6. Let concrete cure.

8.4 Assembly and installation of induction loops

Depending on the application safety installations must be installed on site. Induction loops, light barriers, etc. can be used as safety installations.

The safety installations must ensure that the barrier closes only after the vehicle has passed through. Safety installations, such as induction loops can be purchased from MAGNETIC.

8.4.1 Directions for the assembly and installation of induction loops

On barriers with an automatic closing function induction loops are used for the detection of vehicles. The loop underneath the barrier boom always serves as monitor and closing loop. Meaning, as long as a vehicle is standing on the loop, the barrier stays open. Only after the vehicle has left the loop will the barrier be closed.

Example

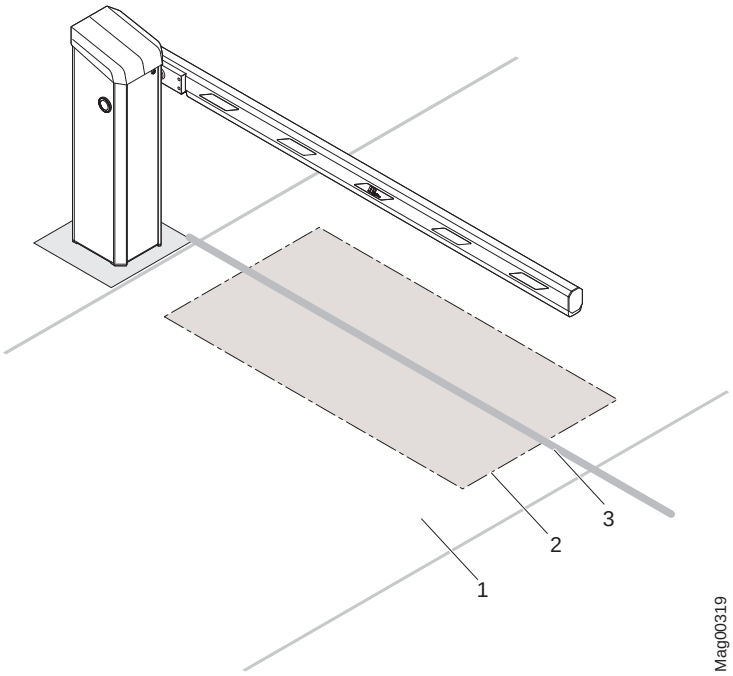

Fig. 18: Arrangement example of an induction loop for passenger car operation

1 Carriageway
2 Induction loop
3 Projection of the barrier boom onto the subsurface with a standard installation of the loop

→ The induction loop setup depends on the application case. For other application cases, see page 37, chapter 7.

Please observe following points when installing the induction loop:

Loop geometry and clearances

- Install the loop symmetrically to the barrier boom. Please make sure that the barrier boom is attached to the side of the barrier housing. → Refer from page 26 Fig. 3.
- The clearance of the safety loop for passenger cars in front of, and behind the barrier boom must be at least 500 mm. The safety loop for lorries must be dimensioned larger. → See also page 52, Fig. 18.
- The distance of the induction loop from the roadside should be about 300 to 500 mm.
- Install opening loops right in front of the safety loop. The clearance between opening loop and safety loop must be not greater than 1 m for lorries and passenger cars, and 0.5 m for motorcycles.
- If there are iron reinforcements, ramp heating etc. in the carriageway, the induction loop must have a clearance of at least 50 mm from those. Metals in the proximity of the induction loop affect the response sensitivity.
- Avoid direct contact of induction loops with reinforcement and ramp heating.
- Install induction loops with sufficient clearance from sliding gates, roller grilles etc.

Installation and ground conditions

- Please make sure when moulding or installing that the loop can not move anymore once it is in operation. Any geometric alteration will act as inductance change, which will set the detector to an error state.
- Brittle road surfaces, loose pavements, gravel paths etc. are not suited for the application of induction loops.

Feed line

- The feed line to the loop must not exceed 15 m.
- The loop connection cable must protrude about 1.5 m from the foundation.
- Shorten the feed line to the loop to the proper length. The feed line must by no means be coiled.
- The feed line must be twisted up to right in front of the terminals of the loop detector with approx. 20 twists per metre.

8.4.2 Induction loops

The induction loops are available as ready assembled cables in various lengths (Type KAS 1 to 5) from MAGNETIC.

Alternatively a loop can be manufactured from single wire. The following requirements must be fulfilled:

- Wire cross section: 0.75 to 1.5 mm^2
- Inductance of the loop: 70 to 500 µH. This is equivalent to a loop with 3 to 6 windings.
- When using hot pouring compounds, such as bitumen temperature resistant loop cables/strands must be used.

8.4.3 Testing induction loops

To verify the contact resistance, insulation resistance, and inductance of the loop these properties must be measured after installation:

- Contact resistance: 0.8 to 2.0 ohms
- Insulation resistance to earth: > 1 Mohm.
- Inductance of the loop: 70 to 500 µH

If the values are not within the specified ranges, the loop is defective.

8.4.4 Installing induction loops in bitumen, asphalt, or concrete

1. Cut a 50 mm deep groove into the surface or asphalt using a cutting disc. The groove must be equally deep at every point. According to Fig. 19 the corners of the groove must be cut in a 45° angle.

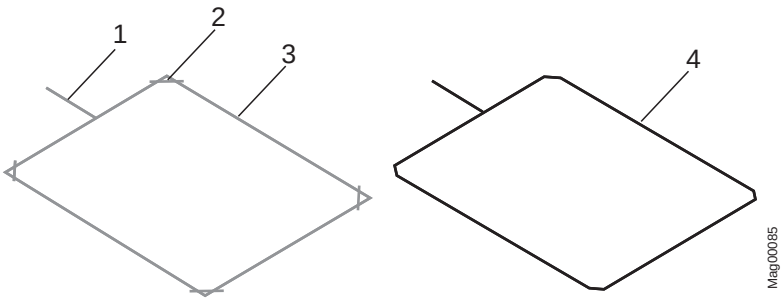

Fig. 19: Installing induction loop in bitumen, asphalt, or concrete

1 Groove for induction loop feed line
2 Corners cut diagonally
3 Groove for induction loop
4 Induction loop

2. Lay the loop carefully into the groove and push it down by means of a blunt object, such as a piece of wood. The insulation must by no means be damaged.
3. To avoid slipping of the loop, fix the loop using small wooden wedges. Remove the wooden wedges later on.
4. Push the loop feed line through the empty conduit in place into the barrier housing.
5. Measure the induction loop according to chapter 8.4.3.
6. We recommend to cover the inserted loop using quartz sand. Make sure that at least 25 mm remain between the upper edge of the carriageway and the quartz sand for the potting compound.
7. Seal the groove with the potting compound.
   - The temperature resistance of the loop must match the temperature of the potting compound.
8. Allow the potting compound to cure.

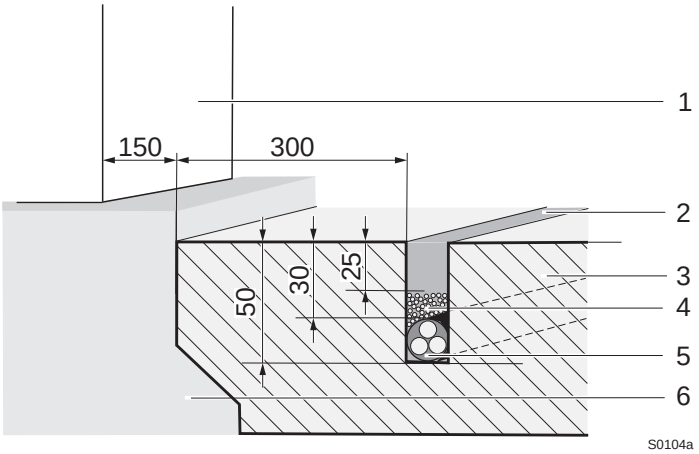

Fig. 20: Installing induction loop in bitumen, asphalt, or concrete (dimensions in mm)

1 Barrier housing
2 Groove with potting compound
3 Asphalt surface
4 Quartz sand filling
5 Loop cable
6 Foundation

8.4.5 Installing induction loops under interlocking stone paving

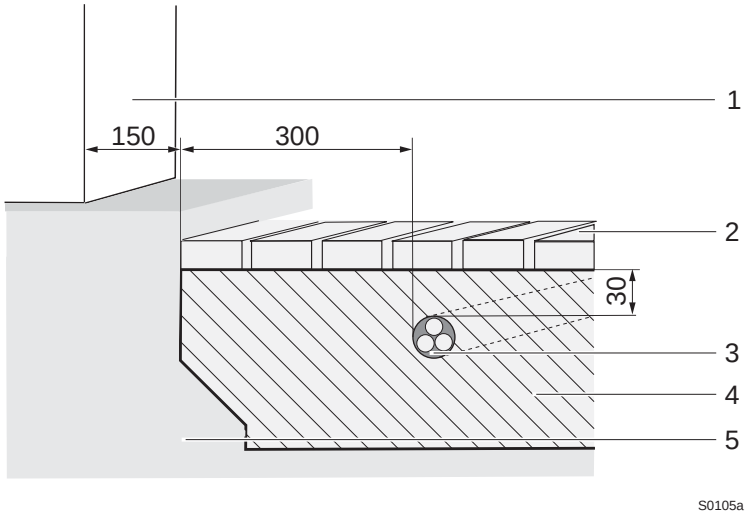

Fig. 21: Installing an induction loop under interlocking stone paving (dimensions in mm)

1 Barrier housing
2 Paving
3 Loop cable
4 Sand bed
5 Substructure

When installing induction loops under interlocking stone paving, following points must be observed additionally:

- Use only pre-assembled cables provided by MAGNETIC (Type KAS 1 to KAS 5).
- Install the induction loop in sand only. The induction loop must not be installed in gravel or split.
- The induction loop must not slip or shift or be damaged during later vehicle traffic.
- Keep a minimum clearance between paving and loop cable of approx. 30 mm.

8.5 Unpacking

The individual packages are packed according to the expected transport conditions. Only environment-friendly materials have been used for the packaging.

The packaging should protect the individual components against transport damages, corrosion, etc up to the assembly. Therefore do not destroy the packaging and remove only directly before assembly.

1. Unpack barrier.
2. Set up barrier housing vertically.
3. Lay down barrier boom.
4. Unpack and lay out accessories.
5. Separate material according to type and size and recycle them after use.

8.6 Open barrier housing

Drive system, balancing springs, connection terminals and control are protected with a hood and two doors. In most cases, it is sufficient to remove the hood and the door facing to the road.

Hood and door facing the road

1. Unlock lock at the door facing the road.
2. Lift hood upwards. For this, push the hood back and lift it from the two disconnections.
3. Pull out the door upwards.

Door facing away from the road

4. Loosen and remove the two hexagon screws with hexagon socket.
5. Pull out the door upwards.

After any work

6. Install doors.
7. Attach and lock the hood.

8.7 Assemble housing

The barrier housing is attached by 4 foundation anchors and 2 attachment profiles. The attachment profiles are included in delivery. You can order a mounting set consisting of a foundation anchor, washers, spring rings and hexagon head screws from MAGNETIC Autocontrol GmbH as accessories.

Requirements mounting material

If you are using your own mounting material, it must meet the following requirements:

- 4 foundation anchors: Fischer reaction anchor with glue cartridge RM 16 and sleeve with inner thread RG18 x 125 M12
- 4 washers DIN 9021 d17, zinc-plated
- 4 washers DIN 9021 d13, zinc-plated
- 4 spring washers DIN 128 A12, zinc-plated
- 4 hexagon head screws DIN 931 M12 x 55 8.8, zinc-plated

Access XL – Assemble barrier housing

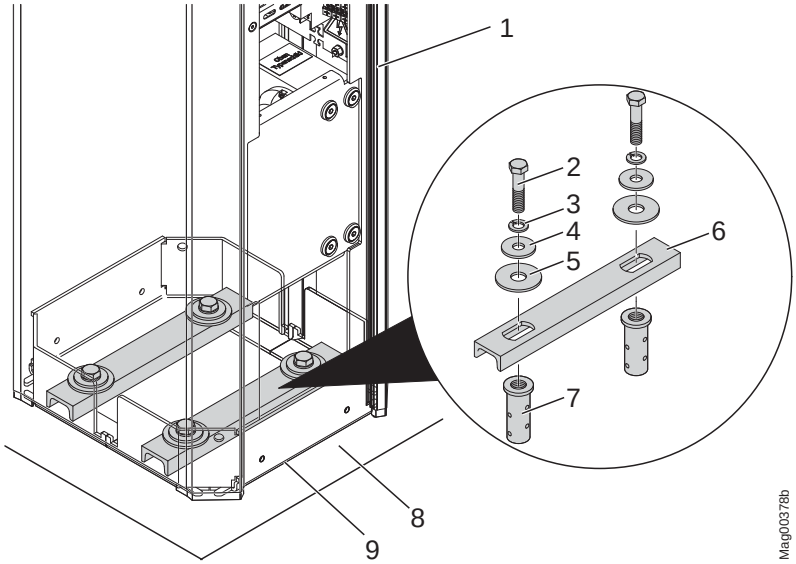

Fig. 22: Assemble barrier housing Access XL

1 *Barrier housing*
2 *Hexagon head screws*
3 *Spring washer*
4 *Washer d13*
5 *Washer d17*
6 *Mounting profile*
7 *Sleeve with inner thread*
8 *Foundation*
9 *Silicon joint*

Access XXL – Assemble barrier housing

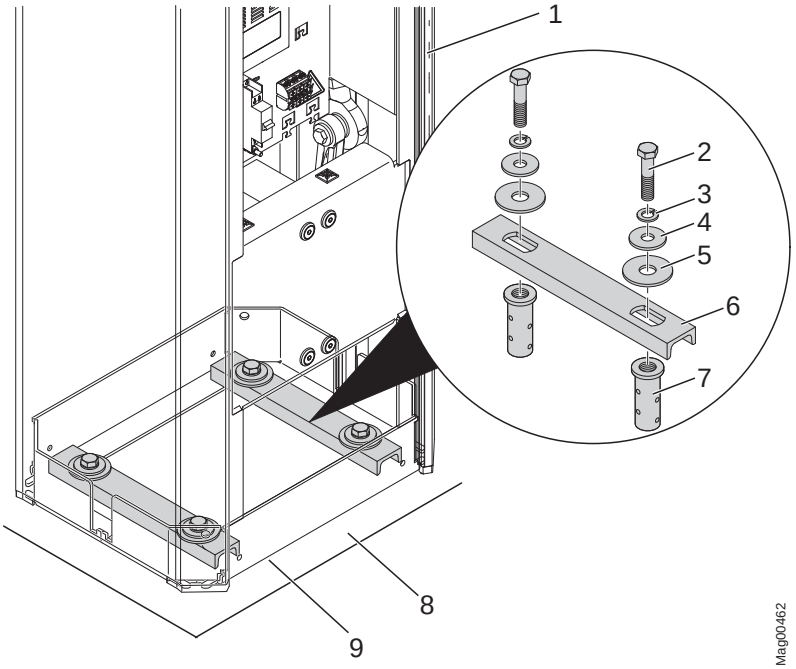

Fig. 23: Assemble barrier housing Access XXL

1 *Barrier housing*
2 *Hexagon head screws*
3 *Spring washer*
4 *Washer d13*
5 *Washer d17*
6 *Mounting profile*
7 *Sleeve with inner thread*
8 *Foundation*
9 *Silicon joint*

Assemble housing

1. The foundation must have cured.
2. Drill holes for the sleeves with inner threads according to the foundation plan. Compliance with the indicate sizes.
   → Access XL: See page 46, Fig. 12
   → Access XXL: See page 48, Fig. 14.
3. Set sleeves with inner thread according to the enclosed instructions.
4. Set up barrier housing upright on foundation.
5. Attach the barrier housing on the foundation. Tighten hexagon head screws slightly for this.
   → Access XL: See page 58, Fig. 22.
   → Access XXL: See page 59, Fig. 23.

6 Align barrier housing. Tighten the hexagon head screws firmly. If a nesting post or light barrier post is installed, observe page 91, chapter 8.14.

7. Seal barrier housing with silicon joint.

8.8 Assemble nesting post or light barrier post

The nesting post and the light barrier post are attached with 4 foundation anchors each. You can order a mounting set consisting of foundation anchor, washers, spring rings and hexagon nuts from MAGNETIC Autocontrol GmbH as accessories.

Requirements mounting material

If you are using your own mounting material, it must meet the following requirements:

- 4 foundation anchors:
  - Features: suitable for concrete C35/45 XD3 XF2
  - Material: Stainless steel
  - Size: M8 x 110
  - Tensile strength: at least 9 kN
    Foundation anchors that are optionally available from MAGNETIC achieve the tensile strength of 9 kN at a drilling depth of 80 mm.
- 4 washers DIN 9021 d8,4, stainless steel
- 4 spring washers DIN 128 A8, stainless steel
- 4 hexagon nuts DIN 934 M8, stainless steel

Assemble nesting post or light barrier post

1. The foundation must have cured.
2. Drill holes for the foundation anchors according to the foundation plan, page 51, Fig. 17. In compliance with the indicated sizes.
   - Drill-hole distance: 100 mm, square alignment
   - Diameter: 10 mm
   - Depth: 80 mm
     (At this drilling depth, a minimum tensile strength of 9 kN must be guaranteed.)
3. Set four foundation anchors M8 x 110.
4. Set up post upright on foundation.
5. Attach the post to the foundation with the anchor bolts and tighten the nuts securely.

8.9 Assemble safety light barrier

Only MAGNETIC safety light barriers must be used.

8.9.1 Assemble transmitter

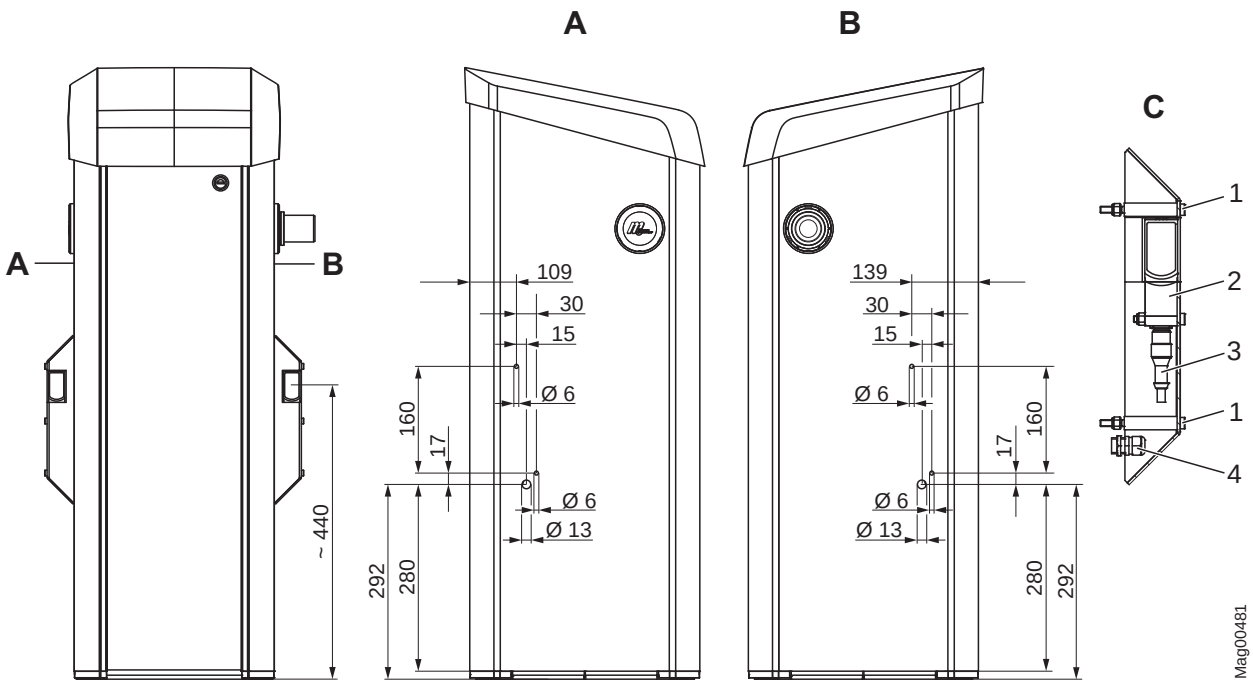

Fig. 24: Assemble of the transmitter's light barrier housing on the barrier housing (dimensions in mm)

A View A
B View B
C Light barrier housing transmitter

1 Hexagon socket screws 5 AF
2 Transmitter
3 Transmitter connection line
4 Cable screw connection

1. Drill holes for the light barrier housing according to Fig. 24.
2. Mount the cable screws at the housing with locknuts.
3. Connect connection line for transmitter to the control unit.
4. Guide connection line through cable screws.
5. Mount light barrier housing to housing with the hexagon socket screws 5 AF.

8.9.2 Assemble receiver

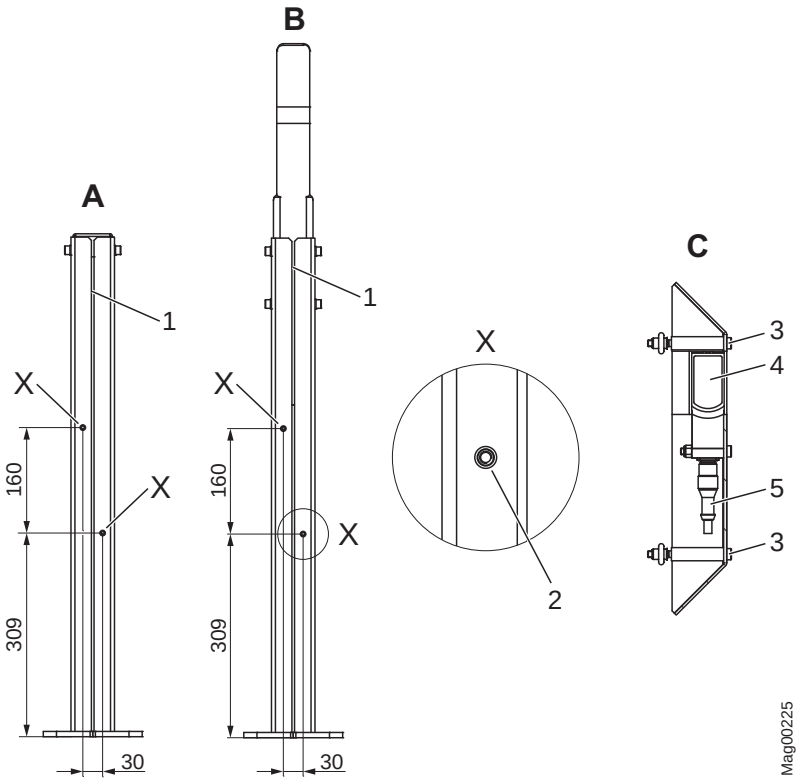

Fig. 25: Assemble the receiver's light barrier housing on the post (dimensions in mm)

A Light barrier post
B Nesting post
C Light barrier housing

1 Gap
2 Drill holes for blind rivet nut
3 Hexagon socket screws 5 AF
4 Receiver
5 Receiver connection line

1. Press the two blind rivet nuts into the two intended bores at the post.
2. Guide the connection line for receiver through the gap in the post.
3. Connect connection line for receiver to the receiver.
4. Mount light barrier housing to housing with the hexagon socket screws 5 AF
5. Close empty conduits with construction foam to prevent water from entering them.

8.10 Assemble barrier boom

8.10.1 Assemble barrier boom up to 6 metres

Danger of injury

⚠ CAUTION

Danger of injury!

There is a danger of injury when assembling the barrier boom.

– Barrier booms must be installed by two persons.

Opening the barrier housing and switching off the voltage supply

1. Secure barrier danger area e.g. with barrier tape.
2. Remove the barrier housing hood.
3. Remove the barrier housing doors.

WARNING!

Danger of crushing between barrier boom and barrier housing!

4. Switch off power supply. Ensure that the system is powered down. Secure against reactivation. The balancing springs in the lever system are relaxed. The flange is vertical.

Assemble barrier boom up to 6 metres

5. Slightly grease nuts to avoid seizing.
6. Assemble barrier boom with hexagon head screws, washers, spring washers and nuts.

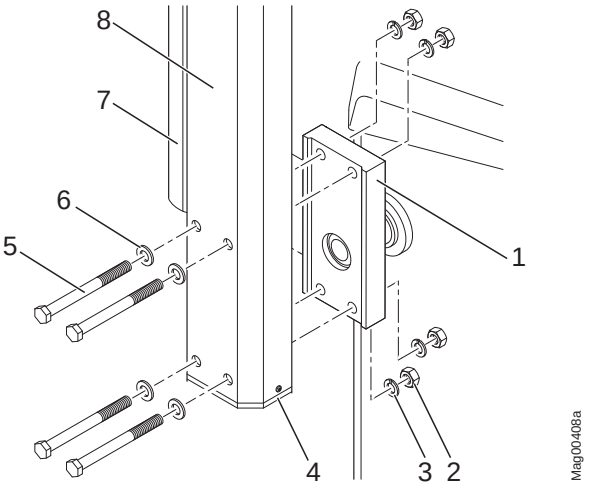

Fig. 26: Assemble barrier boom.

1	*Flange*	*6*	*Washer (4 pieces)*
2	*Nut (4 pieces)*	*7*	*Edge protection (mount after barrier boom assembly)*
3	*Spring disc (4 pcs)*	*8*	*Barrier boom*
4	*End cap (2 pcs)*		
5	*Hexagon head screws (4 pcs)*		

Mount end caps

7. Mount end caps.

Check vertical alignment of the barrier boom up to 6 metres and correct if required

8. Check vertical alignment of the barrier boom with the spirit level.
9. Correct alignment as follows:
   - Check and record the control size of the balancing springs. At a spring control size in excess of 555 mm, reduce the spring tension until the spring control size is less than 555 mm. → See page 87, chapter 8.13.
   - Loosen the 4 hexagon socket screws 10 AF at the two clamping levers. Loosen the 4 hexagon socket screws SW 10 at the two clamping levers. Do not remove the hexagon socket screws. → For Access XL see page 64, Fig. 27 and for Access XXL see page 65, Fig. 28.
   - Turn flange shaft and align barrier boom.

Access XL
Loosen hexagon socket screw

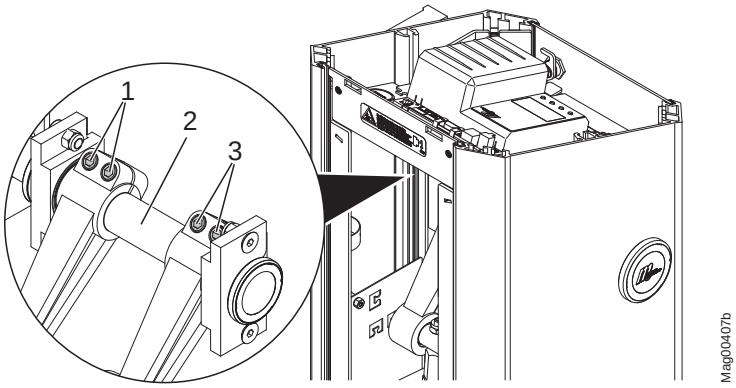

Fig. 27: Access XL – Loosen hexagon socket screws

1 Clamping lever left, hexagon socket screws M12 (10 AF)
2 Flange shaft
3 Clamping lever right, hexagon socket screws M12 (10 AF)

Access XXL
Loosen hexagon socket screw

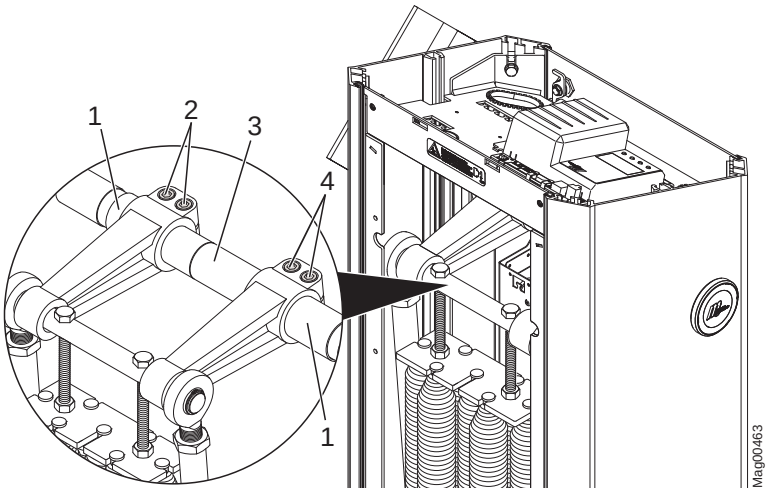

Fig. 28: Access XXL – Loosen hexagon socket screw

1 Spacer sleeve
2 Clamping lever left, hexagon socket screws M12 (10 AF)
3 Flange shaft
4 Clamping lever right, hexagon socket screws M12 (10 AF)

After correction of hexagon socket screws, tighten claiming lever and set balancing springs

10. When the alignment of the barrier boom has been corrected, perform the following steps depending on barrier type:

    Access XL:

    - Tighten the 4 hexagon socket screws 10 AF at the two clamping levers as follows. Observe that the two clamping levers and the spacer discs are each flush with the ball bearing. The clamping levers must be pushed against the ball bearings.
    - Tighten hexagon socket screws of the right clamping lever.
    - Slightly lift the left clamping lever and tighten the hexagon socket screws. The spring shaft must not catch and must run freely.
    - Tighten the 4 hexagon socket screws 10 AF at the two clamping levers with 120 Nm.

    Access XXL:

    - Tighten the 4 hexagon socket screws 10 AF at the two clamping levers at 120 Nm. Observe that the two clamping levers and the spacer sleeves are each flush with the ball bearing. The clamping levers must be pushed against the ball bearings.

11. Set recorded control size between the balancing springs.

Switch on power supply and Mode "Service "

12. Switch on power supply.
13. Switch the "Service" switch on the control device. The LED lights red. The display backlighting flashes.
14. Manually close the barrier with the middle right button ↶ at the control unit.

Check horizontal alignment of the barrier boom

15. Check horizontal alignment of the barrier boom with the spirit level.

Assemble edge protection

16. Assemble edge protection. → See page 71, chapter 8.11.

Switch off Mode "Service", close barrier housing

17. Switch the "Service" switch on the control device. The LED must light green.
18. Install the barrier housing door.
19. Attach and lock the barrier housing hood.

8.10.2 Assemble barrier boom as of 6 metres

Danger of injury

⚠ CAUTION

Danger of injury!

There is a danger of injury when assembling the barrier boom.

– Barrier booms must be installed by two persons.

Scope of delivery

Barrier booms as of 6 metres are delivered in two packages. The packages comprise the following content:

- Package 1 Large boom profile with a length of up to 5 metres with already installed connector. Edge protection and end caps are loosely included.
- Package 2 Small boom profile

Assemble barrier boom

1. Push small boom profile onto connector of the large boom profile.

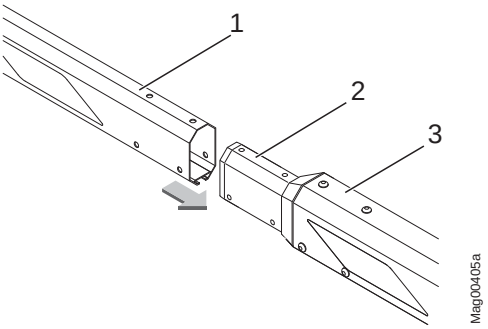

Fig. 29: Push small boom profile onto connector.

1 Small boom profile
2 Connector
3 Large boom profile

2. Install the small boom profile with 6 screws to the large boom profile.

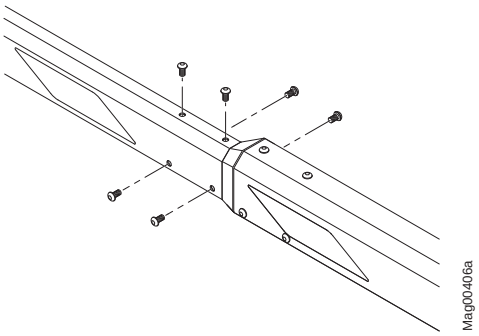

Fig. 30: Assemble the small boom profile.

Opening the barrier housing and switching off the voltage supply

1. Secure barrier danger area e.g. with barrier tape.
2. Remove the barrier housing hood.
3. Remove the barrier housing doors.

WARNING!

Danger of crushing between barrier boom and barrier housing!

4. Switch off power supply. Ensure that the system is powered down. Secure against reactivation. The balancing springs in the lever system are relaxed. The flange is vertical.

Put barrier boom of 6 metres or more into horizontal position

5. Put the flange in the horizontal position. Proceed as follows for this:
   - Check and record the control size of the balancing springs. At a spring control size in excess of 555 mm, reduce the spring tension until the spring control size is less than 555 mm. → See page 87, chapter 8.13.
   - Loosen the 4 hexagon socket screws 10 AF at the two clamping levers. Do not remove the hexagon socket screws. → For Access XL see page 68, Fig. 31 and for Access XXL see page 68, Fig. 32.
   - Turn the flange shaft.

Access XL
Loosen hexagon socket screw

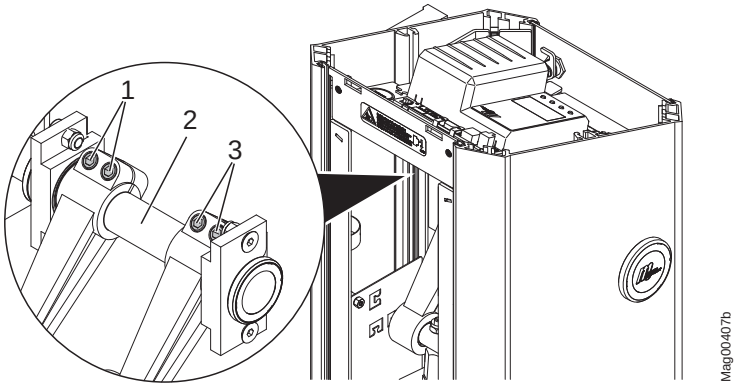

Fig. 31: Access XL Loosen hexagon socket screw

1 Clamping lever left, hexagon socket screws M12 (10 AF)
2 Flange shaft
3 Clamping lever right, hexagon socket screws M12 (10 AF)

Access XXL
Loosen hexagon socket screw

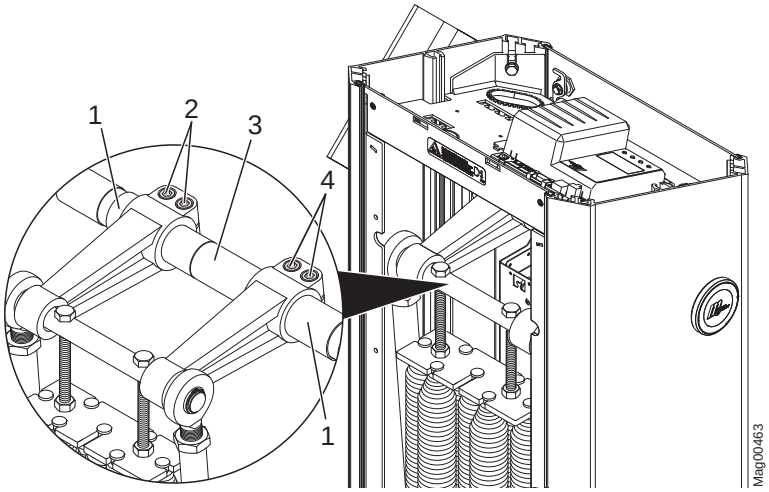

Fig. 32: Access XXL Loosen hexagon socket screw

1 Spacer sleeve
2 Clamping lever left, hexagon socket screws M12 (10 AF)
3 Flange shaft
4 Clamping lever right, hexagon socket screws M12 (10 AF)

Assemble barrier boom as of 6 metres

6. Slightly grease nuts to avoid seizing.
7. Assemble barrier boom with hexagon screws, washers, spring washers and nuts.

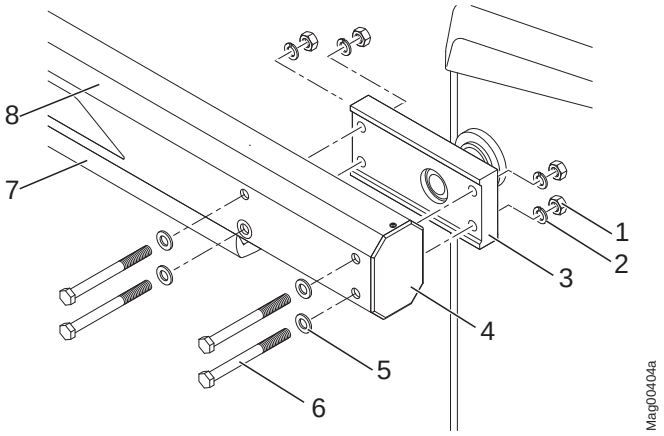

Fig. 33: Assemble barrier boom

1	*Nut (4 pieces)*	*6*	*Hexagon head screws (4 pcs)*
2	*Spring disc (4 pcs)*	*7*	*Edge protection (mount after boom assembly).*
3	*Flange*	*8*	*Barrier boom*
4	*End cap (2 pcs)*		
5	*Washer (4 pieces)*		

Put barrier boom with 6 metres or more into vertical position and align vertically

8. Set the barrier to the vertical position with 2 persons.
9. Check vertical position by spirit level.
10. Align barrier boom by turning the flange shaft.
    → For Access XL see page 68, Fig. 31 and for Access XXL see page 68, Fig. 32.

After correction of hexagon socket screws, tighten claiming lever and set balancing springs

11. When the alignment of the barrier boom has been corrected, perform the following steps depending on barrier type:

    Access XL:

    - Tighten the 4 hexagon socket screws 10 AF at the two clamping levers as follows. Observe that the two clamping levers and the spacer discs are each flush with the ball bearing. The clamping levers must be pushed against the ball bearings.
    - Tighten hexagon socket screws of the right clamping lever.
    - Slightly lift the left clamping lever and tighten the hexagon socket screws. The spring shaft must not catch and must run freely.
    - Tighten the 4 hexagon socket screws 10 AF at the two clamping levers with 120 Nm.

After correction of hexagon socket screws, tighten claiming lever and set balancing springs (continued)

Access XXL:

- Tighten the 4 hexagon socket screws 10 AF at the two clamping levers at 120 Nm. Observe that the two clamping levers and the spacer sleeves are each flush with the ball bearing. The clamping levers must be pushed against the ball bearings.

12. Set recorded control size between the balancing springs.

Switch on power supply and Mode "Service "

13. Switch on power supply.
14. Switch the "Service" switch on the control device. The LED lights red. The display backlighting flashes.
15. Manually close the barrier with the middle right button ↶ at the control unit.

Check horizontal alignment of the barrier boom

16. Check horizontal alignment of the barrier boom with the spirit level.

Assemble edge protection and end cap

17. Assemble edge protection. → See page 71, chapter 8.11.
18. Mount end caps of the barrier boom.

Switch off Mode "Service", close barrier housing

19. Switch the "Service" switch on the control device. The LED must light green.
20. Install the barrier housing door.
21. Attach and lock the barrier housing hood.

8.11 Assemble edge protection

Missing edge protection at the barrier boom

⚠ WARNING

Danger from missing edge protection at the barrier boom!

Missing edge protection at the barrier boom may cause severe or lethal injuries for persons, bicyclers, cabriolet drivers and motorcycle drivers when the barrier boom closes!

– Assemble edge protection.
– If the edge protection is damaged, it must be replaced immediately.

NOTE!

If you use a pendulum support, observe that you must mount part of the edge protection in front of the pendulum support and part of the edge protection behind the pendulum support.

The edge protection is included in the delivery loosely in 2 m pieces. Large and small edge protection is included with barrier booms above 6 metres.

If the barrier was ordered with the light strips option, the barrier boom is delivered with the mounted edge protection.

The number of edge protections is according to the length of the long barrier boom profile.

1. Measure the length of the barrier boom profiles.
2. Shorten edge protection to the required length with a saw. Ensure that you do not compress the edge protection length-wise. The material elongate when heating.
3. Moisten lateral lower area of the barrier boom onto which the edge protection is pushed with water.
4. Slide edge protection in the barrier boom groove.
5. Slide further edge protections into the intended groove until the edge protection ends flush with the barrier boom.

8.12 Conversion "left version" – "right version"

8.12.1 Left and right version

All MHTM™ MicroDrive barriers are available as "left version" and "right version". → See type code, page 25 and starting on page 26, Fig. 3.

If required, you can also remove the barrier boom yourself from one side of the barrier housing and replace it on the other.

8.12.2 Converting barrier boom up to 6 metres

Danger of injury

⚠ CAUTION

Danger of injury!

There is a danger of injury when assembling the barrier boom.

– Barrier booms must be installed by two persons.

Opening the barrier housing and switching off the voltage supply

1. Secure barrier danger area e.g. with barrier tape.
2. Remove the barrier housing hood.
3. Remove the barrier housing doors.

WARNING!

Danger of crushing between barrier boom and barrier housing!

4. Switch off power supply. Ensure that the system is powered down. Secure against reactivation. The balancing springs in the lever system are relaxed. The barrier boom is vertical.

Write down control size

5. Write down control size between the balancing springs. The control size is the size between the upper edge of the upper spring traverse to the upper edge of the lower spring traverse.

Uninstalling barrier boom up to 6 metres

6. Remove barrier boom. → See following figure

Uninstalling barrier boom up to 6 metres (continued)

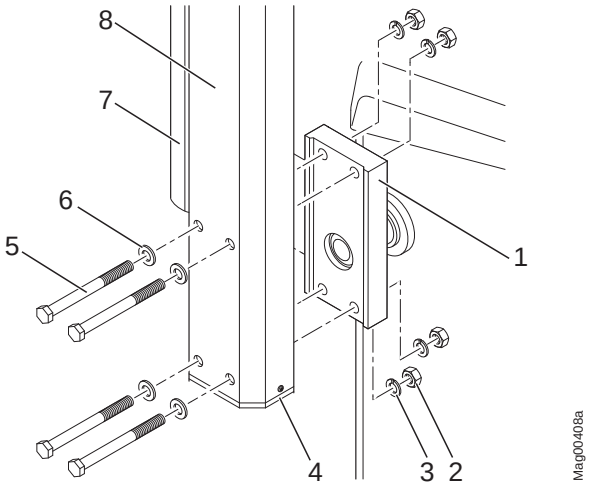

Fig. 34: Remove barrier boom

1	*Flange*	*5*	*Hexagon head screws (4 pcs)*
2	*Nut (4 pieces)*	*6*	*Washer (4 pieces)*
3	*Spring disc (4 pcs)*	*7*	*Edge protection*
4	*End cap (2 pcs)*	*8*	*Barrier boom*

Unhook balancing springs

7. Relive balancing springs. The flange must be upright for this.
8. Perform the following steps depending on barrier type:
   - Access XL: Perform steps 8.13.2 to 6 according to chapter 8. → See page 82.
   - Access XXL: Perform steps 8.13.3 and 7 according to chapter 8. → See page 84.
9. Unhook balancing springs.

Loosen hexagon socket screws, clamping lever

10. Loosen the 4 hexagon socket screws 10 AF at the two clamping levers. Do not remove the hexagon socket screws. → For Access XL see page 74, Fig. 35 and for Access XXL see page 74, Fig. 36.

Access XL
Loosen hexagon socket screw

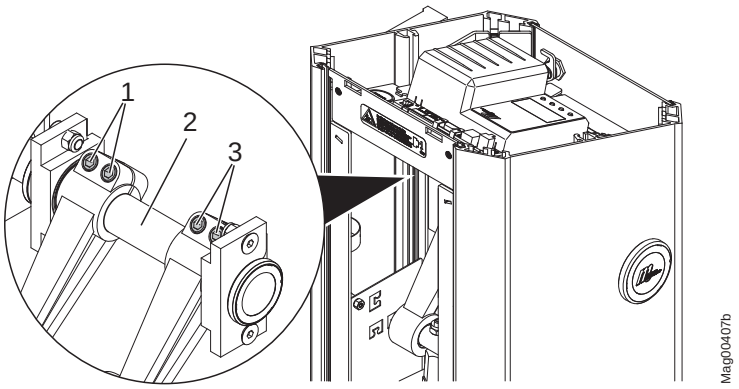

Fig. 35: Access XL – Loosen hexagon socket screw

1 Clamping lever left, hexagon socket screws M12 (10 AF)
2 Flange shaft
3 Clamping lever right, hexagon socket screws M12 (10 AF)

Access XXL
Loosen hexagon socket screw

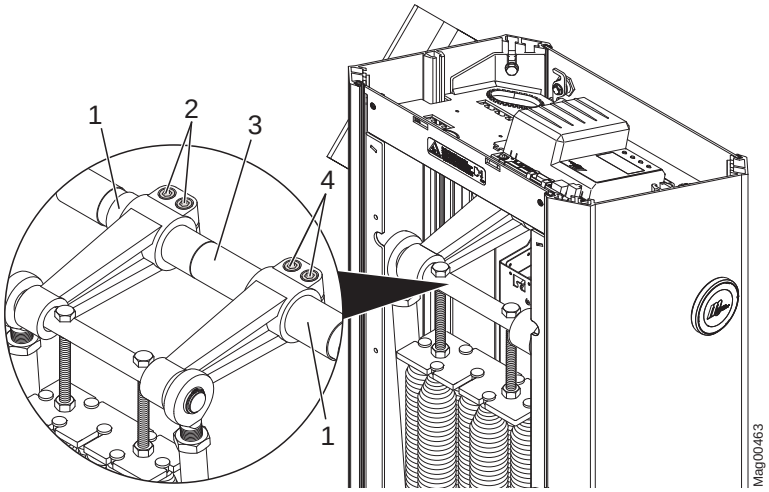

Fig. 36: Access XXL – Loosen hexagon socket screw

1 Spacer sleeve
2 Clamping lever left, hexagon socket screws M12 (10 AF)
3 Flange shaft
4 Clamping lever right, hexagon socket screws M12 (10 AF)

Convert flange shaft

11. Remove the flange shaft cover disc of the barrier housing. Push a long rod through the flange shaft for this and slightly push it against the cover.
12. Pull out the flange shaft with the flange by rotating movements. To warrant the positions of the clamping levers and spacer discs/sleeves, we recommend tracking a pipe or rod with similar diameter as the flange shaft.
13. Insert the flange shaft with the flange from the other side by rotating movements to the stop of the flange. Observe correct seat of the V-ring. The sealing lip must be flush against the plane area of the plastic ring:
14. Put the flange in the vertical position by turning the flange shaft.

Hook in balancing springs

15. Hook in balancing springs:
16. Apply cover disc for the flange shaft.

Check vertical position of the flange and tighten hexagon socket screws, clamping lever

17. Check and if necessary adjust vertical position of the flange by spirit level.
18. Perform the following steps depending on barrier type:

    Access XL:

    - Tighten the 4 hexagon socket screws 10 AF at the two clamping levers as follows. Observe that the two clamping levers and the spacer discs are each flush with the ball bearing. The clamping levers must be pushed against the ball bearings.
    - Tighten hexagon socket screws of the right clamping lever.
    - Slightly lift the left clamping lever and tighten the hexagon socket screws. The spring shaft must not catch and must run freely.
    - Tighten the 4 hexagon socket screws 10 AF at the two clamping levers with 120 Nm.

    Access XXL:

    - Tighten the 4 hexagon socket screws 10 AF at the two clamping levers at 120 Nm. Observe that the two clamping levers and the spacer sleeves are each flush with the ball bearing. The clamping levers must be pushed against the ball bearings.

Assemble barrier boom

19. Assemble the barrier boom with the flange vertical.
    → See page 73, Fig. 34.

Adjust balancing springs

20. Adjust balancing springs with the noted control size.
    - Access XL: → See page 82, chapter 8.13.2, steps 8 to 13.
    - Access XXL: → See page 84, chapter 8.13.3, steps 8 to 12.

Switch on power supply and Mode "Service "

21. Switch on power supply.
22. Switch the "Service" switch on the control device. The LED lights red. The display backlighting flashes.
23. Manually close the barrier with the middle right button ↶ at the control unit.

Check horizontal alignment of the barrier boom

24. Check horizontal alignment of the barrier boom with the spirit level.

Switch off Mode "Service", close barrier housing

25. Switch the "Service" switch on the control device. The LED must light green.
26. Install the barrier housing door.
27. Attach and lock the barrier housing hood.

8.12.3 Converting barrier boom as of 6 metres

Danger of injury

⚠ CAUTION

Danger of injury!

There is a danger of injury when assembling the barrier boom.

– Barrier booms must be installed by two persons.

Opening the barrier housing and switching off the voltage supply

1. Secure barrier danger area e.g. with barrier tape.
2. Remove the barrier housing hood.
3. Remove the barrier housing doors.

WARNING!

Danger of crushing between barrier boom and barrier housing!

4. Switch off power supply. Ensure that the system is powered down. Secure against reactivation. The balancing springs in the lever system are relaxed. The barrier boom is vertical.

Write down control size

5. Write down control size of the balancing springs. The control size is the size between the upper edge of the upper spring traverse to the upper edge of the lower spring traverse.

Relive balancing springs

6. Relive balancing springs. The flange must be upright for this.
7. Perform the following steps depending on barrier type:
   - Access XL: Perform steps 8.13.2 to 6 according to chapter 8. → See page 82.
   - Access XXL: Perform steps 8.13.3 and 7 according to chapter 8. → See page 84.

Loosen hexagon socket screws, clamping lever and turn flange shaft

8. Loosen the 4 hexagon socket screws 10 AF at the two clamping levers. Do not remove the hexagon socket screws. → See following figures.

Access XL
Loosen hexagon socket screw

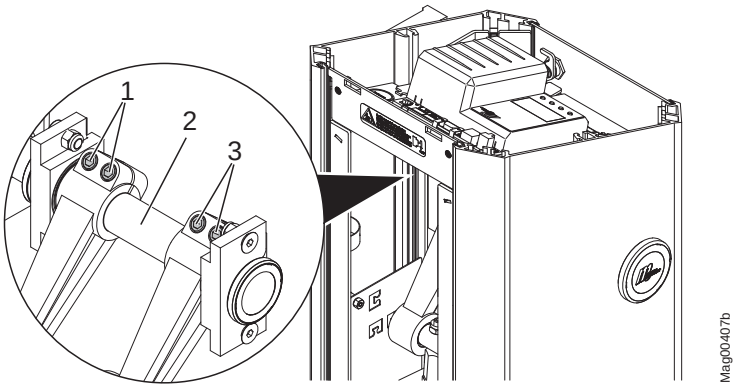

Fig. 37: Access XL – Loosen hexagon socket screw

1 Clamping lever left, hexagon socket screws M12 (10 AF)
2 Flange shaft
3 Clamping lever right, hexagon socket screws M12 (10 AF)

Access XXL
Loosen hexagon socket screw

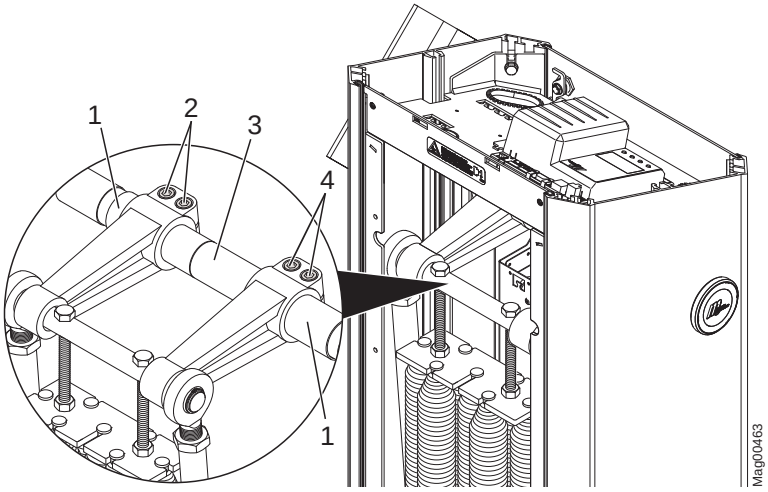

Fig. 38: Access XXL – Loosen hexagon socket screw

1 Spacer sleeve
2 Clamping lever left, hexagon socket screws M12 (10 AF)
3 Flange shaft
4 Clamping lever right, hexagon socket screws M12 (10 AF)

9. Turn flange shaft until the barrier boom tip touches the ground. Perform step with 2 persons.

Uninstalling barrier boom as of 6 metres

10. Remove barrier boom. → See following figure

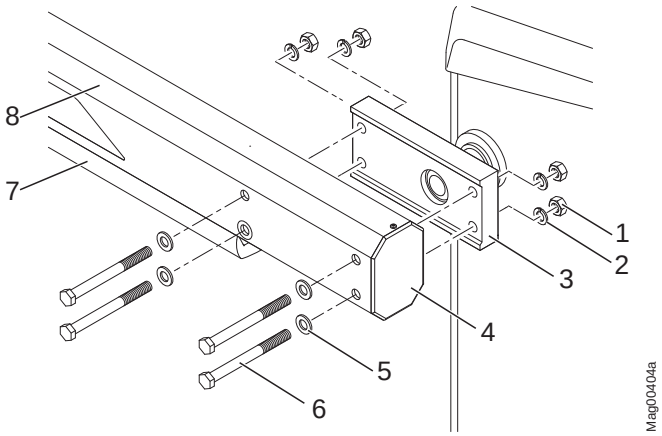

Fig. 39: Remove barrier boom

1	*Nut (4 pieces)*	*5*	*Washer (4 pieces)*
2	*Spring disc (4 pcs)*	*6*	*Hexagon head screws (4 pcs)*
3	*Flange*	*7*	*Edge protection*
4	*End cap (2 pcs)*	*8*	*Barrier boom*

Unhook balancing spring

11. Unhook balancing springs.

Convert flange shaft

12. Remove the flange shaft cover disc of the barrier housing. Push a long rod through the flange shaft for this and slightly push it against the cover.
13. Pull out the flange shaft with the flange by rotating movements. To warrant the positions of the clamping levers and spacer discs/sleeves, we recommend tracking a pipe or rod with similar diameter as the flange shaft.
14. Insert the flange shaft with the flange from the other side by rotating movements to the stop of the flange. Observe correct seat of the V-ring. The sealing lip must be flush against the plane area of the plastic ring:
15. Put the flange in the vertical position by turning the flange shaft.

Hook in balancing springs

16. Hook in balancing springs:
17. Apply cover disc for the flange shaft.

Assemble barrier boom as of 6 metres

18. Put the flange in the horizontal position by turning the flange shaft.
19. Install the barrier boom with two persons with the horizontal flange. → See page 78, Fig. 39.
20. Set the barrier to the vertical position with 2 persons.

Check vertical position of the flange and tighten hexagon socket screws, clamping lever

21. Check and if necessary adjust vertical position by spirit level.
22. Perform the following steps depending on barrier type:

    Access XL

    - Tighten the 4 hexagon socket screws 10 AF at the two clamping levers as follows. Observe that the two clamping levers and the adjusting washers are each flush with the ball bearing. The clamping levers must be pushed against the ball bearings.
    - Tighten hexagon socket screws of the right clamping lever.
    - Slightly lift the left clamping lever and tighten the hexagon socket screws. The spring shaft must not catch and must run freely.
    - Tighten the 4 hexagon socket screws 10 AF at the two clamping levers with 120 Nm.

    Access XXL

    - Tighten the 4 hexagon socket screws 10 AF at the two clamping levers at 120 Nm. Observe that the two clamping levers and the spacer sleeves are each flush with the ball bearing. The clamping levers must be pushed against the ball bearings.

Adjust balancing springs

23. Adjust balancing springs with the noted control size.
    - Access XL: → See page 82, chapter 8.13.2, steps 8 to 13.
    - Access XXL: → See page 84, chapter 8.13.3, steps 8 to 12.

Switch on power supply and Mode "Service "

24. Switch on power supply.
25. Switch the "Service" switch on the control device. The LED lights red. The display backlighting flashes.
26. Manually close the barrier with the middle right button ↶ at the control unit.

Check horizontal alignment of the barrier boom

27. Check horizontal alignment of the barrier boom with the spirit level.

Switch off Mode "Service", close barrier housing

28. Switch the "Service" switch on the control device. The LED must light green.
29. Install the barrier housing door.
30. Attach and lock the barrier housing hood.

8.13 Check and set the balancing springs in the lever system

Danger of crushing, lever system

⚠ WARNING

Danger of crushing at opened barrier housing at the lever system!

The lever system in the barrier housing can cause serious crushing injuries!

- Balancing springs in the lever system must only be checked and adjusted by specialised personnel.
- Balancing springs must only be checked and adjusted with the power supply turned off
- Wear protective gloves if necessary.

NOTICE

The barrier system can be damaged by improper repair!

Other considerable damage may result from improper repair.

- Replace all springs if a spring is broken.

The lever system has balancing springs that exactly balance the barrier boom weight. These balancing springs are pre-set in the factory. The precise setting must be performed after assembly of the barrier boom and before commissioning.

The lever force is determined not only by the spring tension but also by the number of springs used and the spring rate. MAGNETIC uses two spring types. Depending on application case, you will have to set the spring tension, remove the springs, use additional springs or use springs with a different spring rate.
→ See also page 87, chapter 8.13.4.

In the "Power failure" menu, you can set the barrier behaviour in case of voltage failure. → See separate document "Description of control units MGC and MGC Pro for MHTM™ MicroDrive barriers".

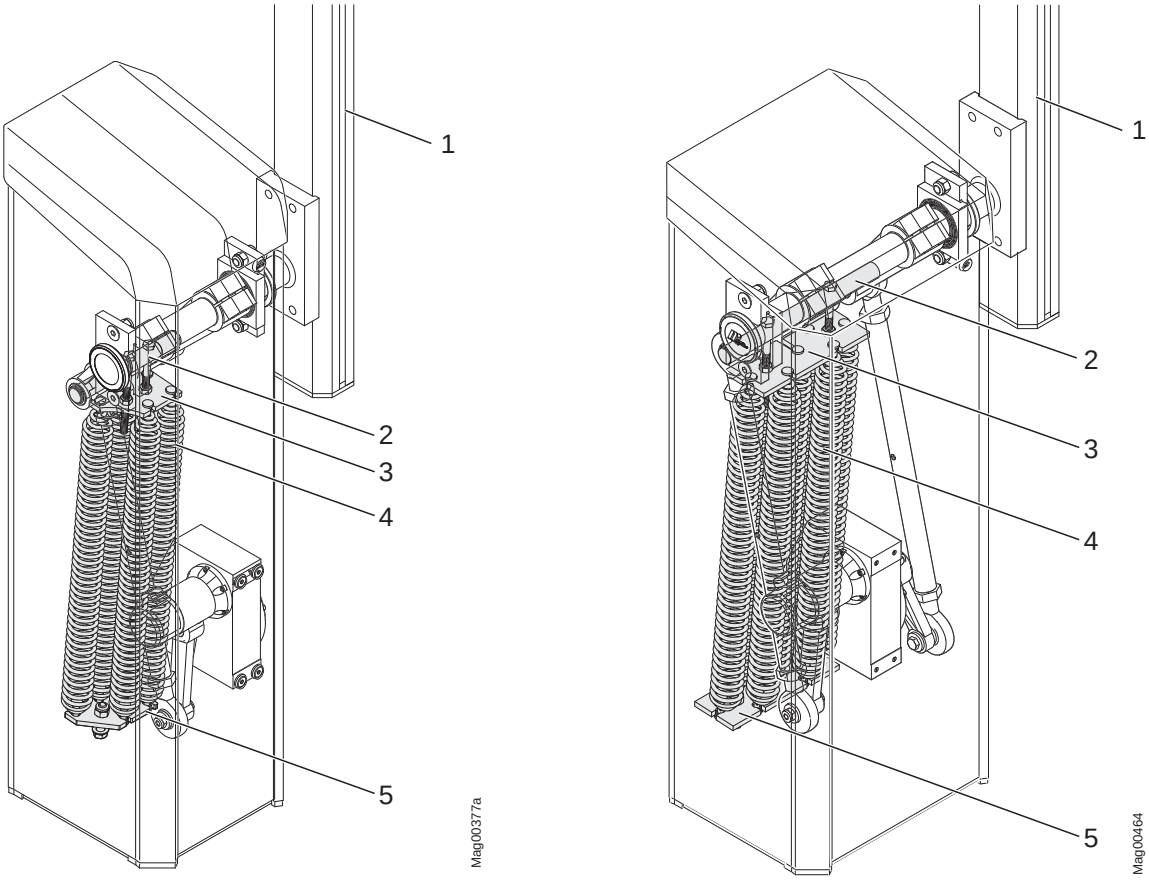

Fig. 40: Balancing springs in the lever system
left: Access XL, right: Access XXL

1 Barrier boom
2 Spring shaft
3 Upper spring traverse
4 Balancing spring
5 Lower spring traverse

8.13.1 Check setting of balancing springs

Check balancing springs with the motor warm from operation.

1. Secure barrier danger area e.g. with barrier tape.

WARNING!

Danger of crushing between barrier boom and barrier housing!

2. Switch off power supply. Ensure that the system is powered down. Secure against reactivation.

3. Manually put the barrier boom in the 30°-position. If required, push the lever arm from the dead point manually via the coupling rod. → See page 125, chapter 12.5.

4. Let go of barrier boom.
   - If the barrier boom stays in the 30° position, the balancing springs are set correctly.
   - If the barrier boom does not stay in the 30° position, the balancing springs must be adjusted. If the barrier boom opens after it released from the 30° position, the balancing springs are too strongly pre-tensioned. If the barrier boom closes after it released from the 30° position, the balancing springs are too weakly pre-tensioned.

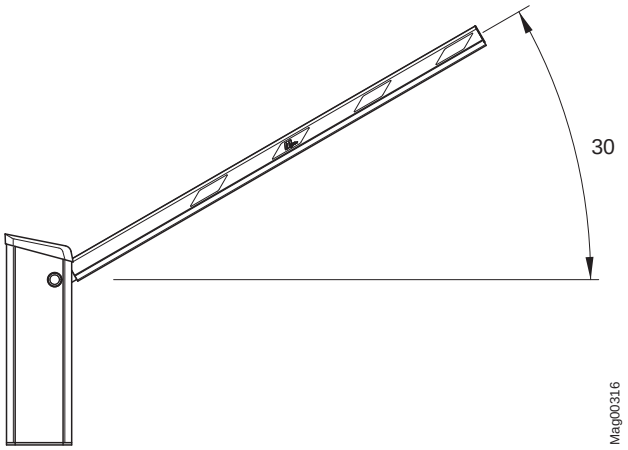

Fig. 41: Opening angle barrier boom 30°

8.13.2 Setting balancing springs Access XL

Improper setting of the balancing springs

⚠ WARNING

Danger from improper setting of the balancing springs!

Improper setting of the balancing springs may cause damage to the spring suspension and thus uncontrolled, quick closing of the barrier boom. Uncontrolled, quick closing of the barrier boom may cause severe or potentially fatal injury!

– Set springs precisely according to the instructions in chapter 8.13.2. Always align the upper spring traverse and spring shaft in parallel. The admissible deviation is no more than 1 mm (< 1 mm).
– If required, contact Magnetic Service.

1. Secure barrier danger area e.g. with barrier tape.
2. Remove the barrier housing hood.
3. Remove the barrier housing doors.

WARNING!

Danger of crushing between barrier boom and barrier housing!

4. Switch off power supply. Ensure that the system is powered down. Secure against reactivation.

5. The balancing springs must be relieved. For this, put the barrier boom in the vertical position.

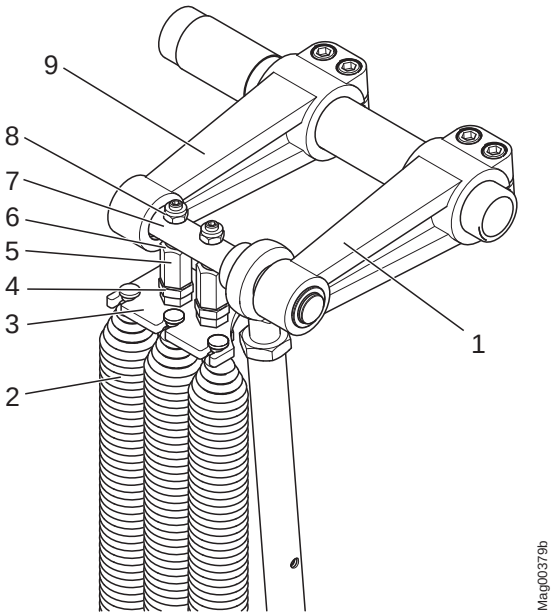

Fig. 42: Setting balancing springs Access XL

1 Clamping lever right
2 Balancing spring
3 Upper spring traverse
4 Counter nut M16
5 Hexagon shaft 22 AF
6 Cone hexagon shaft 22 AF
7 Spring shaft
8 Nut M10
9 Clamping lever left

6. Unscrew the M16 nuts (Fig. 42, item 4) evenly. Hold the respective hexagon shaft 22 AF for this.
7. Unscrew the M10 nuts (Fig. 42, item 8) evenly. For this, hold the respective hexagon shaft 22 AF until the cone of the hexagon shaft is clearly free (approx. 2 mm).
8. Use a wrench to alternatingly turn the hexagon shafts in the respective direction by approx. one turn.
   - Increasing spring tension: Turn hexagon shafts clockwise.
   - Reducing spring tension: Turn hexagon shafts counterclockwise.
9. Check parallelism of the upper spring traverse to the spring shaft. For this, measure the distance between the upper spring traverse and the spring shaft at both ends of the spring traverse.
10. Tighten the two M10 nuts evenly with a torque of 50 Nm. The cones of the hexagon shafts 22 AF must be gripped by the spring shaft again. Check again that the spring shaft is parallel to the spring traverse and correct if required.
11. Counter M16 nuts against the spring traverse.
12. Check barrier boom position according to chapter 8.13.1 → See page 81.
13. If required, repeat steps 6 to 10 until the barrier boom is balanced in the 30° position.
14. Switch on power supply.
15. Install the barrier housing door.
16. Attach and lock the barrier housing hood.

8.13.3 Setting balancing springs Access XXL

Improper setting of the balancing springs

⚠ WARNING

Danger from improper setting of the balancing springs!

Improper setting of the balancing springs may cause damage to the spring suspension and thus uncontrolled, quick closing of the barrier boom. Uncontrolled, quick closing of the barrier boom may cause severe or potentially fatal injury!

– Set springs precisely according to the instructions in chapter 8.13.3 Always align the upper spring traverse and spring shaft in parallel. The admissible deviation is no more than 1 mm (< 1 mm).
– If required, contact Magnetic Service.

1. Secure barrier danger area e.g. with barrier tape.
2. Remove the barrier housing hood.
3. Remove the barrier housing doors.

WARNING!

Danger of crushing between barrier boom and barrier housing!

4. Switch off power supply. Ensure that the system is powered down. Secure against reactivation.
5. The balancing springs must be relieved. For this, put the barrier boom in the vertical position.

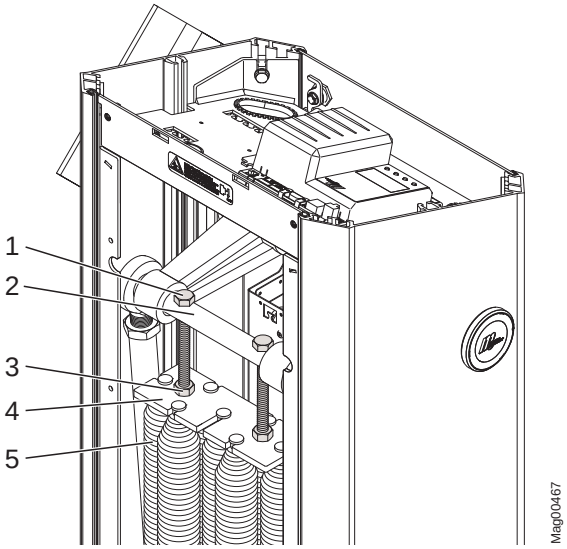

Fig. 43: Setting balancing springs Access XXL

1 Hexagon head screws M12 (19 AF)
2 Spring shaft
3 Counter nut M12 (19 AF)
4 Upper spring traverse
5 Balancing spring

6. Put the barrier boom in the vertical position. The balancing springs are relieved:
7. Evenly loosen the M12 nuts (Fig. 43, item 3).
8. Use a 19 AF wrench to alternatingly turn the two hexagon screws in the respective direction by approx. one turn.
   - Increasing spring tension: Turn hexagon screw clockwise.
   - Reducing spring tension: Turn hexagon screw counter-clockwise.
9. Check parallelism of the upper spring traverse to the spring shaft. For this, measure the distance between the upper spring traverse and the spring shaft at both ends of the spring traverse.
10. Tighten M12 nuts.
11. Check barrier boom position according to chapter 8.13.1. → See page 81.
12. If required, repeat steps 7 to 9 until the barrier boom is balanced in the 30° position.
13. Switch on power supply.
14. Install the barrier housing door.
15. Attach and lock the barrier housing hood.

8.13.4 Overview table balancing springs Access XL and Access XXL

NOTE!

The following overview tables "Balancing springs" do not take into consideration any attachment parts. For barrier booms with attachment parts, the required number of springs may deviate from the number of springs in the overview table.

Overview table balancing springs for barriers Access XL and Access XXL without pendulum support

Lane width [m]	Number springs weak	Number springs strong [1)]	Control size [mm] [2)]
5.0	3	–	551
5.1	3	–	551
5.2	3	–	552
5.3	3	–	560
5.4	3	–	569
5.5	3	–	577
5.6	1	1	569
5.7	1	1	578
5.8	4	–	551
5.9	4	–	551
6.0	4	–	553
6.1	4	–	558
6.2	4	–	562
6.3	4	–	565
6.4	4	–	569
6.5	4	–	573
6.6	4	–	577
6.7	–	2	555
6.8	–	2	560
6.9	–	2	563
7.0	–	2	567
7.1	–	2	571
7.2	–	2	575
7.3	–	2	579

Lane width [m]	Number springs weak	Number springs strong [1)]	Control size [mm] [2)]
7.4	5	–	556
7.5	5	–	560
7.6	5	–	564
7.7	5	–	567
7.8	5	–	571
7.9	5	–	575
8.0	5	–	578
8.1	1	2	562
8.2	1	2	566
8.3	1	2	569
8.4	1	2	573
8.5	1	2	577
8.6	1	2	581
8.7	1	2	584
8.8	2	2	551
8.9	2	2	553
9.0	2	2	556
9.1	2	2	559
9.2	2	2	563
9.3	2	2	566
9.4	2	2	570
9.5	2	2	573
9.6	2	2	577
9.7	–	3	572
9.8	–	3	576
9.9	–	3	579
10.0	3	2	557

1) The strong springs are marked with a yellow dot at the suspension bolt.

2) Control size: Size between the upper edge of the upper spring traverse to the upper edge of the lower spring traverse

Table 12: Overview table balancing springs for barriers Access XL and Access XXL without pendulum support

8.13.5 Equipment plan balancing springs Access XL

The balancing springs are placed as follows in the Access XL barriers.

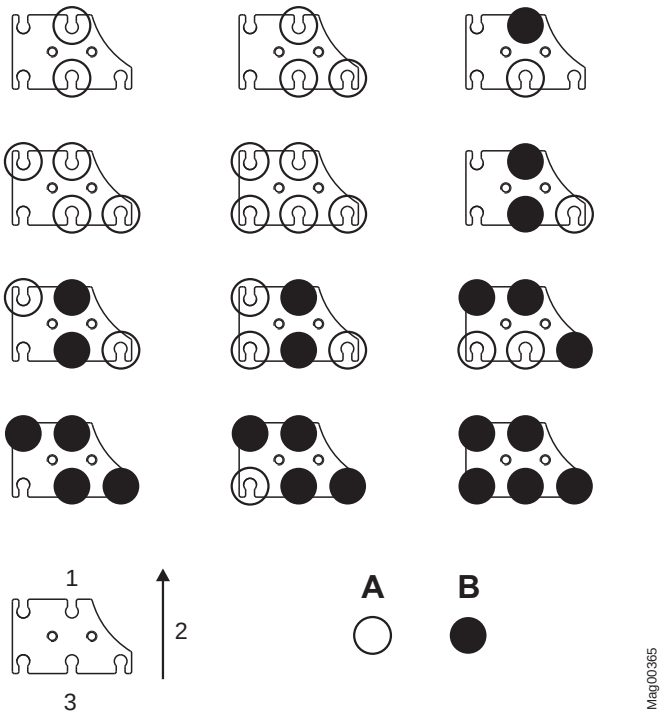

Fig. 44: Equipment plan balancing springs Access XL

1 Front
2 Barrier boom
3 Rear

A Weak springs
B Strong springs
(marked with a yellow dot at the suspension bolt)

8.13.6 Equipment plan balancing springs Access XXL

The balancing springs are placed as follows in the Access XXL barriers.

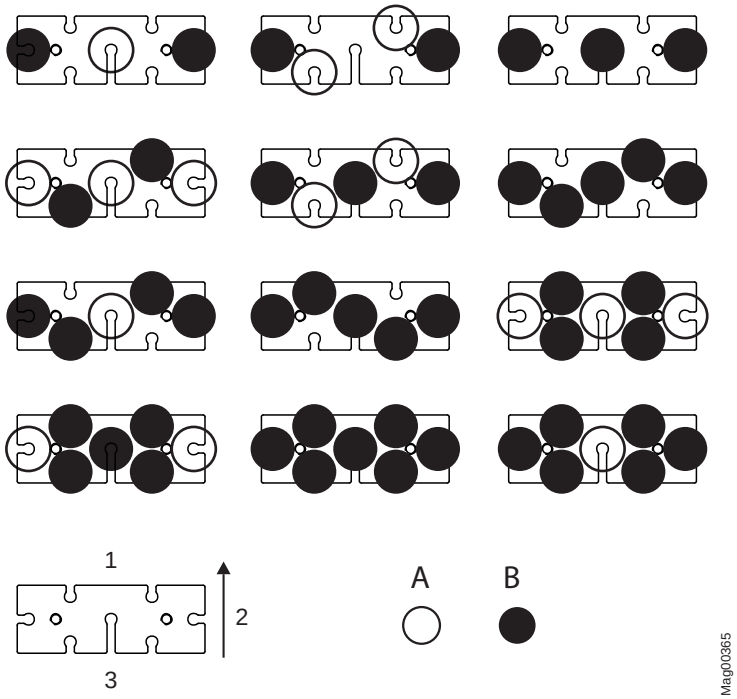

Fig. 45: Equipment plan balancing springs Access XXL

1 Front
2 Barrier boom
3 Rear

A Weak springs
B Strong springs
(marked with a yellow dot at the suspension bolt)

8.14 Align barrier housing and post

Falling components

⚠ WARNING

Risk of injury from falling components!

Falling components such as the barrier housing can cause severe injury!

– When aligning the barrier housing and nesting post, loosen the attachment screws only slightly.
– Tighten the attachment screws again after alignment.

NOTE!

You can set the nesting post height.
→ See page 91, chapter 8.15.

Alignment conditions for nesting post

The barrier boom must run centrally into the nesting post fork.

Alignment conditions for light barrier

Transmitter and receiver of the light barrier must be aligned with each other for an object to be securely detected. For final alignment, transmitter and receiver must be electrically connected.
→ See page 102, chapter 9.4.4.

1. Slightly loosen the barrier housing and post attachment screws.
2. Align barrier housing and post with each other.
3. Tighten the barrier housing and post attachment screws again.
4. Seal barrier housing with a Silicon joint according to page 58, Fig. 22 and page 59, Fig. 23

8.15 Set nesting post height

Danger of crushing

⚠ CAUTION

Crushing danger between the fork at the nesting post and the barrier boom!

Fingers and hands can be crushed when the barrier boom runs into the nesting post when closing.

– Switch off power supply during assembly.
– Do not hold on to fork from the inside. Wear safety gloves if required.

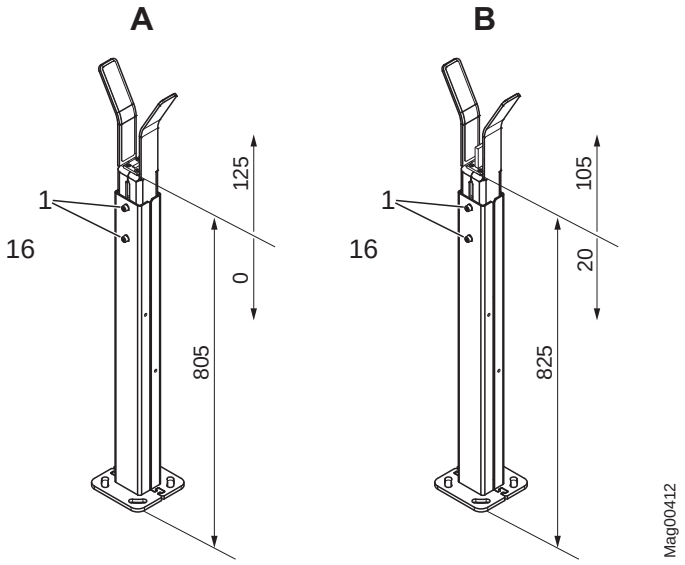

Fig. 46: Set nesting post height (dimensions in mm)

A Nesting post
B Nesting post with lock
H Reference height

1 Torx screws

You may set the nesting post height, e.g. to balance out level differences in the foundations.

1. Loosen the two Torx screws until the nesting post fork can be moved. Hold on to the fork.
2. Set the fork to the desired height.
3. Tighten the two Torx screws with 16 Nm.

8.16 Stick on prohibition signs

The delivery includes two prohibition signs as stickers. Attach the prohibition signs to the barrier boom according to the following drawing.

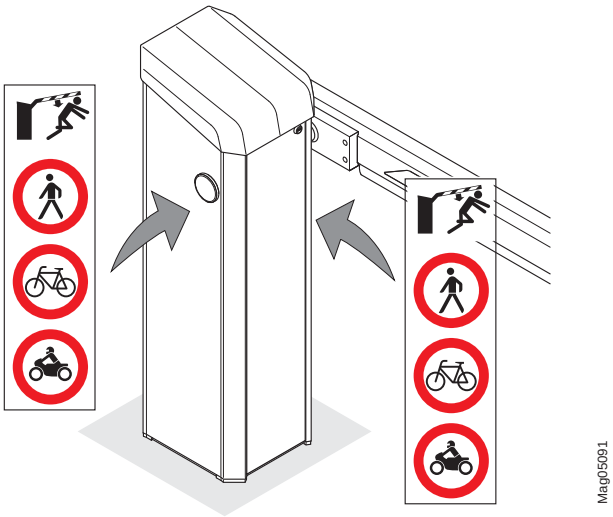

Fig. 47: Apply prohibition signs, shown here for barrier type, here Access XL

NOTE!

When a motorcycle loop is installed, the lower prohibition sign must be cut off.

8.17 Check assembly and installation

The following points must be checked after assembly and installation of the barrier:

- Are all foundation anchors firmly fixed?
- Are all screws firmly tightened?
- Have all barrier housing covers been properly assembled?
- Are warning signs applied?

9 Electrical connection

9.1 Safety

→ See also safety notes on page 16, chapter 2.6 "Occupational safety and special dangers".

Electric voltage

⚠ DANGER

Mortal danger by electric voltage!

Touching live parts can be lethal.

Damage to the insulation or to individual components can be lethal.

- Switch off the power supply immediately in case of damage to the insulation and arrange repair.
- Only electrical specialists may carry out work on the electrical system.
- Switch off power supply and secure against re-activation before performing any work. Test for absence of voltage!
- Never bypass or deactivate fuses.
- When replacing fuses observe the correct amperage specification.
- Keep moisture and dust away from live parts. Moisture or dust may cause a short circuit. If the electrical connection is established during precipitation, e.g. rain or snow, penetration of moisture must be prevented by suitable measures, such as a protective cover.

General

⚠ WARNING

Danger by inappropriate installation!

Inappropriate installation can cause severe or lethal injuries.

- Only electrical specialists must perform any electrical installation tasks.
- Pay attention to tidiness and cleanness at the assembly site! Loosely stacked or lying around components and tools are accident sources.
- Tighten all screws correctly.

Hot surfaces

⚠ CAUTION

Danger of burns!

The motor surface may be hot. Touching this hot surface can lead to burns.

– Do not touch these hot surfaces.
– After switching off the power supply wait some minutes until the motor has cooled down.
– Wear protective gloves if necessary.

Electromagnetic interference

NOTICE

Electromagnetic interferences may cause malfunctions of the barrier or adjacent devices!

The barrier is approved for industrial, residential, commercial a business use. Operation in other electro-magnetic environmental conditions may cause interferences or malfunctions.

– Place control lines and mains cables into separate conduits
– Use cables according to the electrical circuit plan.
– Only install and apply additional parts approved by MAGNETIC.
– The electrical and electronically additional parts must be EMC verified and must not exceed the indicated EMC limit values.

Personal protective equipment

The following must be worn during all installation work:

- Work clothes
- Protective gloves
- Safety shoes
- Protective helmet.

9.2 Installing electrical protective devices

The safety installations that are required according to regional and local regulations must be provided by the customer. Usually these are:

- Residual current device (RCD)
- Circuit-breaker
- Lockable 2-pole main switch acc. to EN 60947-3.

9.3 Connecting the power cable

Electric voltage

DANGER

Mortal danger by electric shock!

If the mains supply is not connected to the terminal clamps correctly, loosens from the connection clamps and touches the housing or door, there is a direct danger to life from electric shock.

– Only electrical specialists may carry out work on the electrical system.
– Connect power supply according to the following description.
– Install electrical protective devices according to chapter 9.2.

NOTE!

The wire cross-section of the mains line must be between 1.5 and 4 mm². Observe national provisions on line length and associated cable cross-section.

DANGER!

Mortal danger by electric voltage!

1. Disconnect barrier system power supply. Ensure that the system is powered down. Secure against reactivation.

Strip-off cable and core insulation – preparation of the wiring

2. Strip-off mains supply and cores according to the following figure.

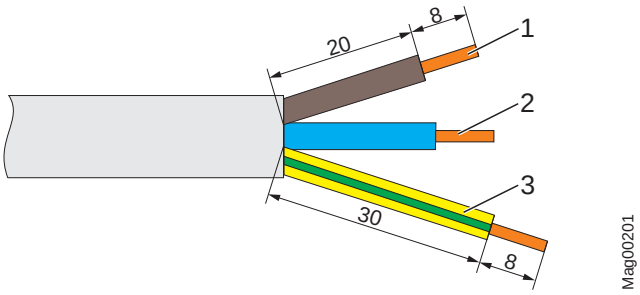

Fig. 48: Strip-off the mains supply (dimensions in mm)

1 Phase
2 Zero conductor
3 Earth conductor

Mains supply placement

3. Connect the mains supply with the intended terminal clamps X1: L / N / PE) in the barrier housing according to the following figures → See also page 134, chapter 16.1 "Wiring diagram".
   - Place mains supply properly in the barrier housing. The line must not get into moving components.
   - Attach power supply to the metal tabs with 2 cable ties.

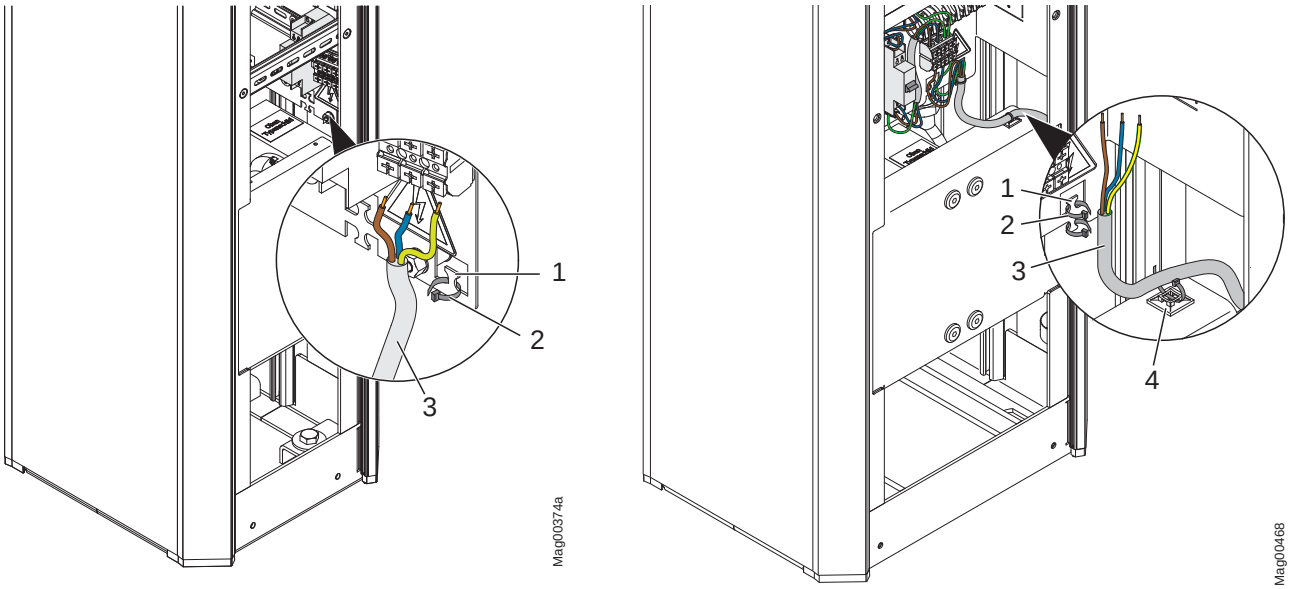

Fig. 49: Mains supply placement
Left: Access XL, right: Access XXL

1 Cable tie metal tabs
2 Cable binder
3 Mains supply
4 Only Access XXL: Additional attachment option at the motor traverse

Connecting the power cable

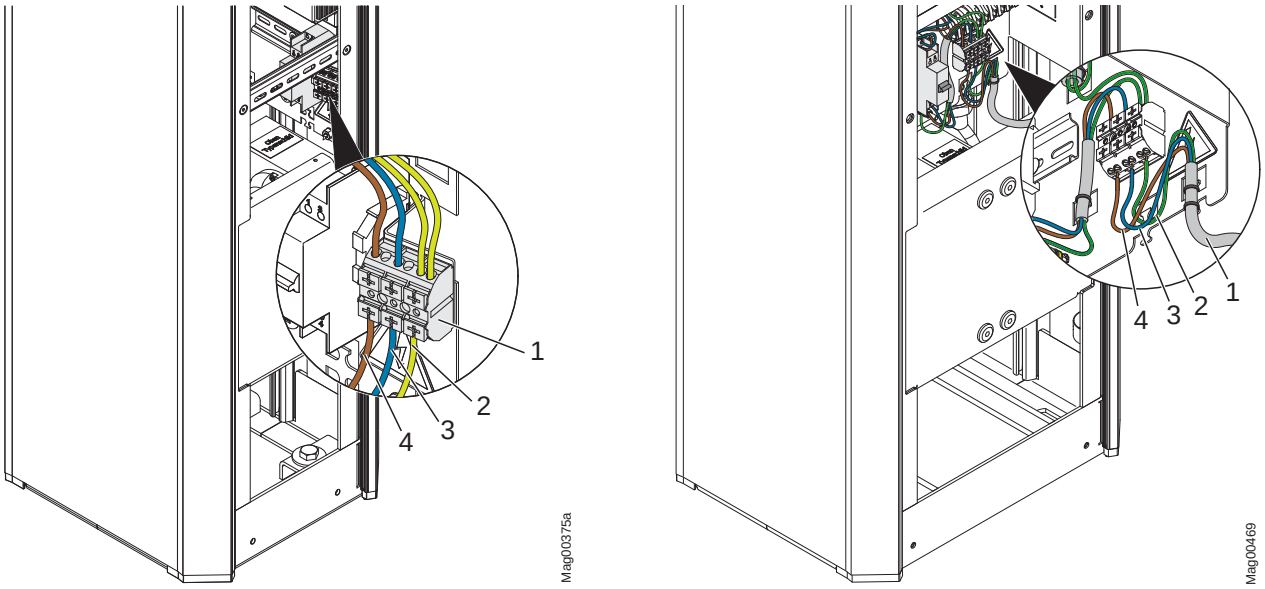

Fig. 50: Connecting the power cable
Left: Access XL, right: Access XXL

1 Power cable terminals
2 Earth conductor PE
3 Zero conductor N
4 Phase L

9.4 Connect customer's control lines (signalling devices)

The following connections are available for control and feedback on customer's side:

- 8 Digital inputs for controlling the barrier.
- 4 Digital outputs to feed back information.
- 6 Relays outputs to feed back information. 3 Relays are normally-open (NO) and 3 relays are change-over contacts.

DANGER!

Mortal danger by electric voltage!

1. Disconnect barrier system power supply. Ensure that the system is powered down. Secure against reactivation.

Connecting the control lines

2. Guide control lines into the connection space through the line penetrations.
   - Properly place control lines behind the cable clamps. The control lines must not get into moving components.
   - Attach control lines to metal tabs if required.
3. Connect control lines according to wiring diagram.
   → See page 134, chapter 16.1 "Wiring diagram".

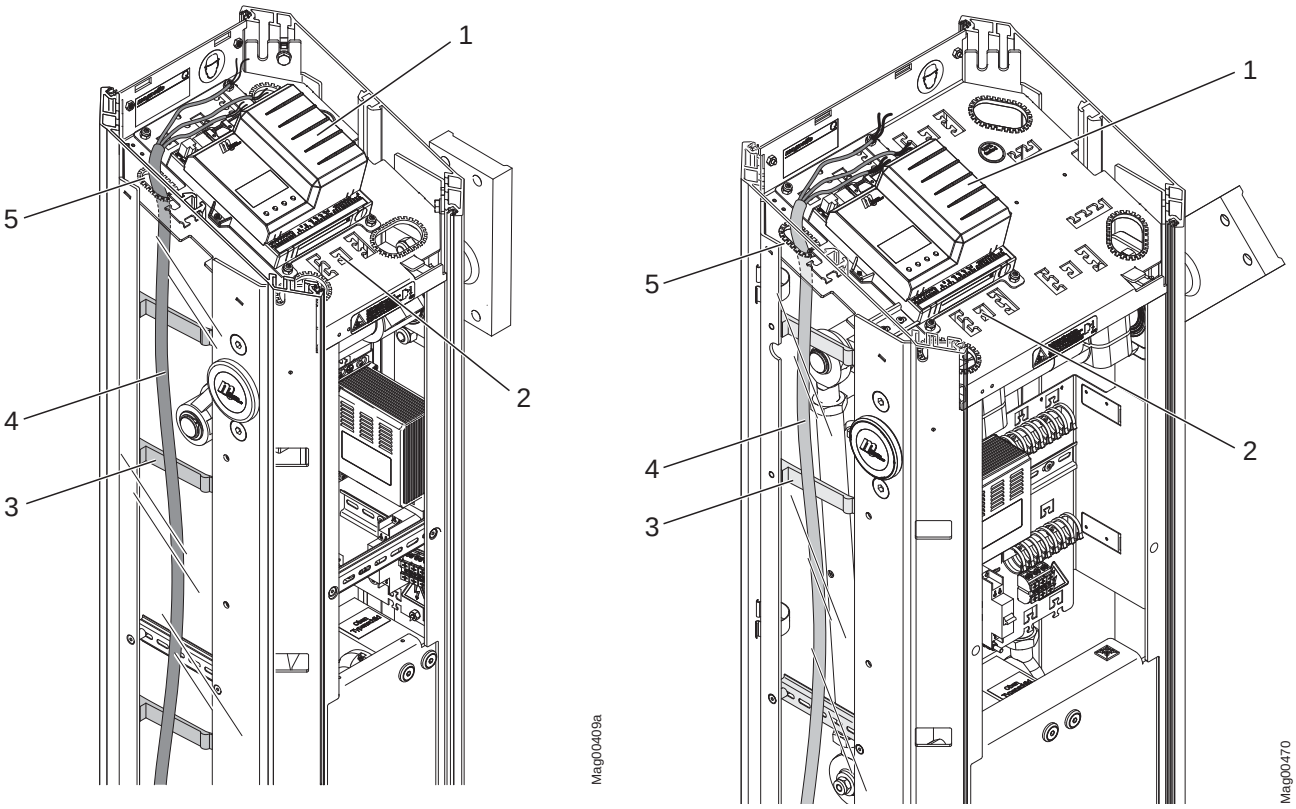

Fig. 51: Connecting the control lines
Left: Access XL, right: Access XXL

1 Control unit
2 Cable tie metal tabs
3 Cable clamps
4 Control line
5 Line penetration

9.4.1 Connecting safety devices

As safety devices, you must connect safety loops or safety light barriers to the control unit. Safety loops must only be connected to monitor vehicles. Only MAGNETIC safety light barriers must be used.

If you connect a safety loop, the barrier closes only after the safety loop is clear. If you connect a safety light barrier, the barrier closes only after the safety light barrier is clear.

9.4.2 Plausibility check of the safety devices

NOTE!

The plausibility check is deactivated by default in barriers in Deadman operation at a closing speed of ≥ 2.2 seconds.

The plausibility check prevents that the barrier can be operated without safety device or with defective safety device.

When the voltage supply is switched on, it is verified that at least one safety device was passed by a vehicle or person within three barrier openings. In operation, the number is increased to ten barrier openings.

If the plausibility check fails, the barrier is decommissioned for reasons of safety. The message "Safety device missing" appears on the display.

NOTE!

The input function "Additional safety device" must only be used for additional monitoring devices. The input function is not considered in the plausibility check. A safety loop always has to be connected to the detector module or a testable safety light barrier at the clamps X11 and X20.

Procedure at failed plausibility check

1. Remove cause for failed plausibility check.
2. Reset the barrier. → See page 125, chapter 12.4.

9.4.3 Connecting safety loop

The safety loop is connected to the plug-in module "Detector1 (A-B)", clamps A or clamps B. → See page 134, chapter 16.1 "Wiring diagrams".

The clamp function parameters can be set in the menu "Detector 1 (A-B)" with the parameters "Mode A" or "Mode B". → See separate document "Description of control units MGC and MGC Pro for MHTM™ MicroDrive barriers".

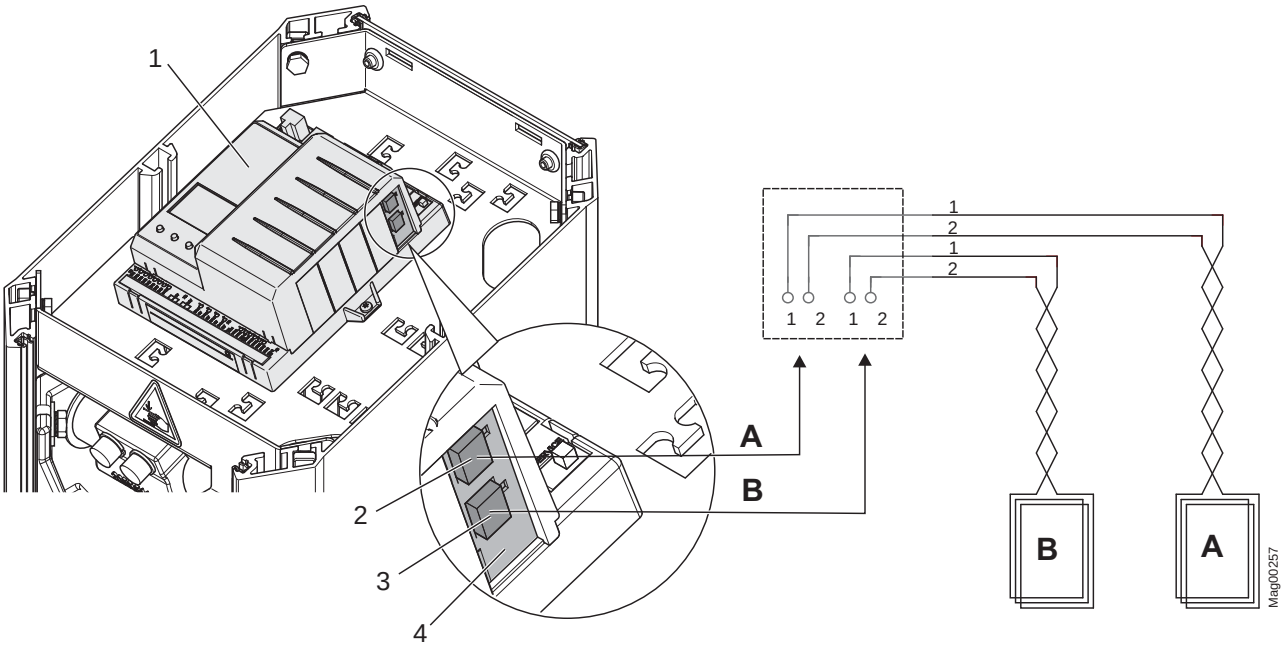

Fig. 52: Connecting safety loops

1 Control unit
2 Connection of induction loop A
3 Plug-in module "Detector 1 (A-B)"
4 Connection of induction loop B
A Induction loop A
B Induction loop B

NOTE!

If four induction loops must be supervised, you can connect another plug-in module with the "Detector" function into the control unit. This plug-in module registers as "Detector 2 (C-D)". To prevent mutual interference between the induction loops, we recommend using a plug-in module instead of an external detector.

9.4.4 Connect and test the safety light barriers

Connecting safety light barrier

Connect the transmitter and receiver connection lines of the safety light barriers to clamps X11 and X20.

By default, MAGNETIC installs a jumper between terminals X11 OUT and IN. When a safety light barrier is connected, the jumper must be removed.

→ See page 134, chapter 16.1 "Wiring diagrams".

Aligning the safety light barrier

The receiver is mounted at the post and the transmitter at the barrier housing. Alternatively, the receiver can also be installed to an opposite barrier housing.

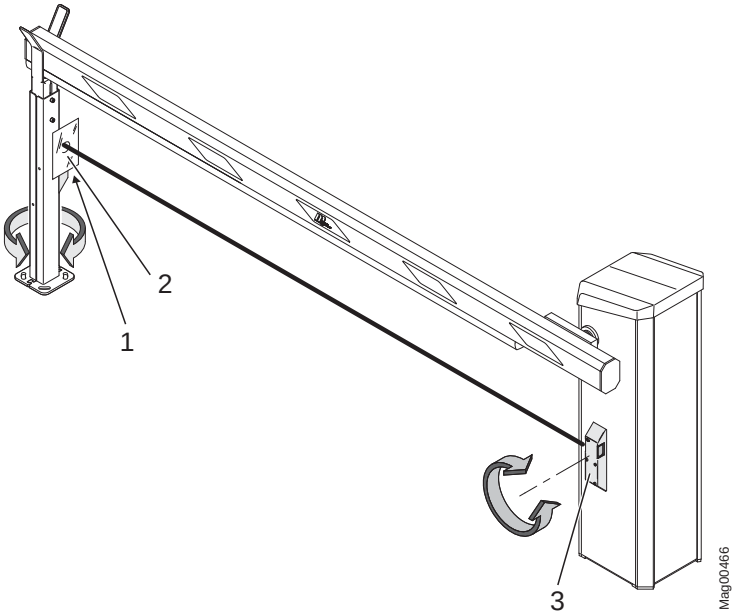

Fig. 53: Use reflex foil, here Access XL

1 Receiver, covered by reflective foil
2 Reflective foil
3 Transmitter

1. There must not be any objects between the transmitter and receiver. The light path must be free.
2. Switch on power supply.
3. The green LEDs at the transmitter and receiver must be lit.
4. Align receiver with transmitter. If required, hold the included reflective foil in front of the receiver as setting aid.
   The yellow LED at the receiver lights up when aligned correctly. Align receiver as follows:
   - Slightly loosen the post attachment screws.
   - Turn the post, until the yellow LED at the receiver is lit.
   - Tighten attachment screws of the post.
5. Keep reflective foil in the barrier housing.

Check safety light barrier function

Perform function test by holding an object into the light path between the transmitter and receiver.

The following items must be met:

- The yellow LED at the receiver must go out.
- The barrier cannot be closed.

9.4.5 Connecting emergency opening contacts

Fire-fighter switch, emergency opening contacts, etc. are connected to the "Open high priority" input. When the signal is applied to this input, the barrier opens. While the signal is present, the barrier cannot be closed.

→ See page 134, chapter 16.1 "Wiring diagram".

9.4.6 Digital inputs

Technical data

→ See page 30, chapter 4.3.

NOTE!

The digital input functions can be freely parameterised. → For parametrisation of the digital inputs, see separate document "Description of control units MGC and MGC Pro for MHTM™ MicroDrive barriers".

Factory setting

Clamp	Description	Function
IN1	Input 1	Open low priority
IN2	Input 2	Open low priority
IN3	Input 3	Opening with vend count
IN4	Input 4	Open high priority
IN5	Input 5	External opening loop exit
IN6	Input 6	Close
IN7	Input 7	Close
IN8	Input 8	Boom contact

Table 13: Factory settings "Digital inputs"

9.4.7 Digital outputs and output relays

Technical data

→ See page 30, chapter 4.3.

NOTE!

The digital output and output relay functions can be freely parameterised. → For parametrisation of the digital inputs, see separate document "Description of control units MGC and MGC Pro for MHTM™ MicroDrive barriers".

Factory setting

Clamp	Description	Function
DO1	Digital output 1	Boom locking
DO2	Digital output 2	Pulse after passage
DO3	Digital output 3	Signal light A
DO4	Digital output 4	Signal light B
NO1	Relay 1	Open
NO2	Relay 2	Closed
NO3	Relay 3	Error
NO4/NC4	Relay 4	Loop active A
NO5/NC5	Relay 5	Loop active B
NO6/NC6	Relay 6	Signal light C

Table 14: Factory settings "Digital outputs" and "Relay outputs"

9.5 Checking the electrical connection

The following points have to be checked after the electrical installation of the barrier:

- Are the following electrical protective devices installed: lockable 2-pole main switch, circuit breaker and leakage current fault interrupter?
- Is the power cable connected to the terminal in compliance with chapter 9.3?
- Are the induction loops connected according to the wiring diagram?
- Are the safety light barriers connected according to the wiring diagram?
- Are the control lines connected according to wiring diagram?
- Have all barrier housing covers been properly assembled?

10 Start-up and operation

10.1 Safety

→ See also safety notes on page 16, chapter 2.6 "Occupational safety and special dangers".

General

⚠ WARNING

Danger by inappropriate start-up and operation!

Inappropriate start-up and operation can cause severe or lethal injuries.

- Commissioning and operation must be performed by specialists or electrical specialists.
- Always observe the radius of action of the barrier boom.
- Prior to start of works ensure that all housing covers are correctly mounted.

Wind forces over 10 Beaufort

⚠ WARNING

Risk of injury from breaking off barrier booms in case of high wind speeds!

In case of wind speeds exceeding 10 Beaufort, the barrier boom may break off from the wind load and cause severe injuries.

Therefore observe in case of storm warnings above 10 Beaufort:

- Disassemble barrier boom or secure it with suitable measures.
- Stop operating the barrier system.

Personal protective equipment

The following must be worn during start-up:

- Work clothes
- Protective gloves
- Safety shoes
- Protective helmet.

10.2 Commissioning

Check before to initial start-up

The following inspections must be performed prior to initial start-up:

- Check electrical connections.
- Check barrier boom position.
- Check balancing springs in the lever system and adjust if required.

Inspection during the first start-up

The following inspections must be performed prior to first start-up:

- Check programme mode. → See separate document "Description of control units MGC and MGC Pro for MHTM™ MicroDrive barriers", chapter "Select programme mode".
- Check parameterisation in connection with wiring.
- Testing and setting the operating frequency of the induction loops. → See separate document "Description of control units MGC and MGC Pro for MHTM™ MicroDrive barriers", chapter "Detector 1 (A-B)".
- Check the function of the barrier, induction loops, and the signalling devices.

10.3 Switching on and off the barrier

NOTICE

A too early mains voltage power up after a shut down can result in damage of the equipment!

– Wait for at least 10 seconds after shutting off the mains voltage before you switch the mains voltage on again.

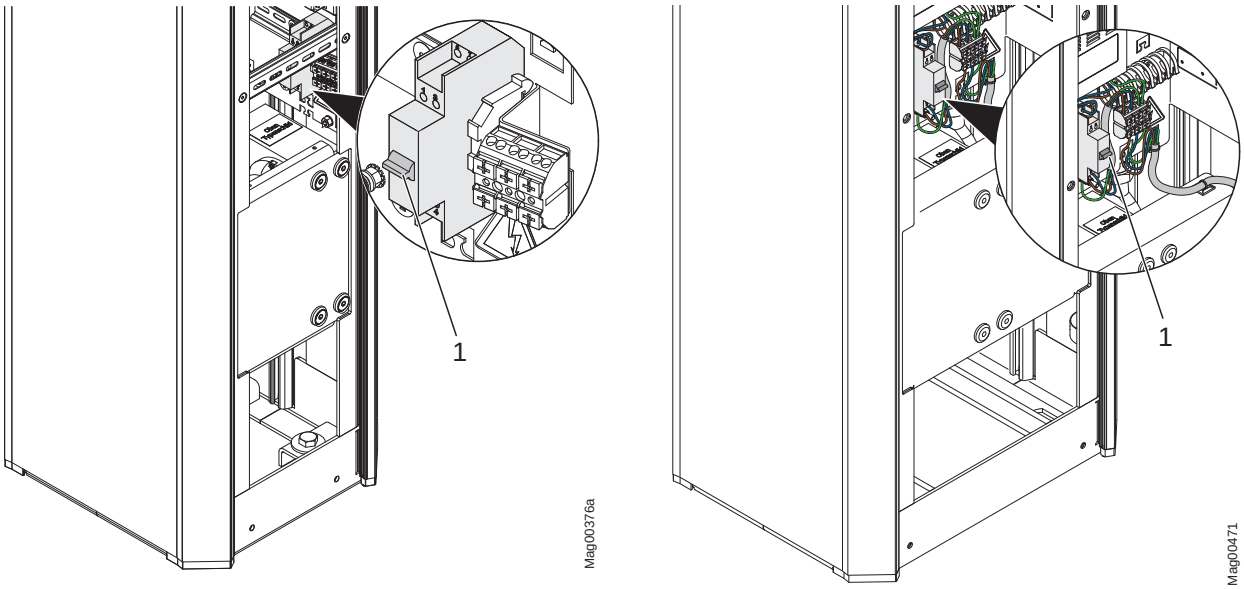

Fig. 54: Switching on and off barrier
left: Access XL, right: Access XXL

1 2-pole mains switch

Switching on

1. Remove the barrier housing hood.
2. Remove the barrier housing door.
3. Switch on the barrier via the 2-pole mains switch.
4. Depending on the settings in the "Start-up behaviour" menu, the barrier boom slowly moves into the top end position (homing run) or stops.
5. Mount the door.
6. Attach and lock the hood.

Switching off

1. Remove the barrier housing hood.
2. Remove the barrier housing door.
3. Switch off the barrier via the 2-pole mains switch.
4. Depending on the settings of the lever system's balancing spring and the settings in the menu "Power failure", the barrier boom opens or closes. → See separate document "Description of control units MGC and MGC Pro for MHTM™ MicroDrive barriers", chapter "Power failure".
5. Mount the door.
6. Attach and lock the hood.

10.4 Open and close the barrier manually

You can only open and close the barrier manually in the "Service" mode.

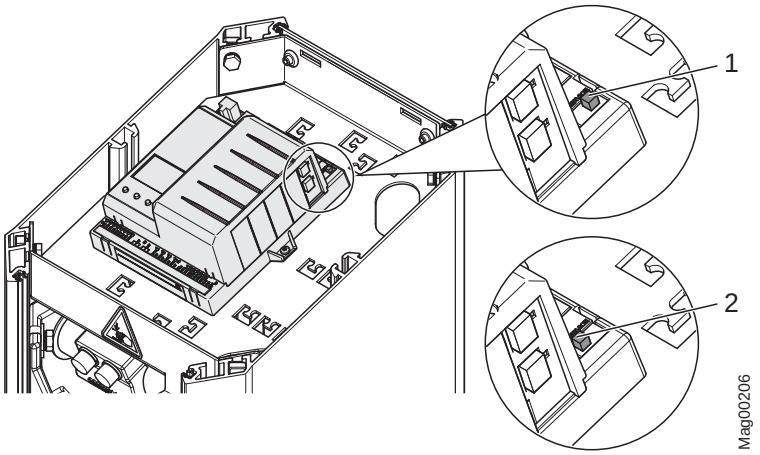

Fig. 55: Service switch

1 Mode "Service" on
2 Mode "Service" off

1. Switch the "Service" switch for the "Service" mode. The LED lights red. The display backlighting flashes.
2. Perform one of the following functions:
   - Push middle left button : Manually open the barrier.
   - Push middle right button : Manually close the barrier.
3. Switch "Service" switch. The LED must light green.

NOTE!

For reasons of safety, the first barrier boom motion after switching between programme mode and service mode is performed at slow speed.

10.5 Putting the barrier temporarily out of operation

High wind speeds

⚠ WARNING

Risk of injury from barrier boom in case of high wind speeds!

The barrier boom is no longer securely locked with the mains voltage off. At high wind speeds, the barrier boom can be pressed from its end position. The moving barrier boom can severely injure a person.

– Keep supplying the barrier with mains voltage.
– Remove the barrier boom if necessary.

NOTICE

Possible damage to the equipment by condensed water when mains voltage is switched off!

– Keep supplying the barrier with mains voltage.

If the barrier is put out of operation for a longer period, proceed as follows:

1. Switch off barrier. → See page 107, chapter 10.3.
2. Remove the barrier boom if necessary. → See page 128, chapter 13.3.
3. Protect the barrier from corrosion and contamination.
4. Switch on barrier. → See page 107, chapter 10.3.

11 Cleaning and maintenance

11.1 Safety

→ See also safety notes on page 16, chapter 2.6 "Occupational safety and special dangers".

General

⚠ WARNING

Danger by inappropriate cleaning and maintenance!

Inappropriate cleaning and maintenance can cause severe or lethal injuries.

- All cleaning and maintenance work must be performed by specialists or electrical specialists.
- Prior to work, ensure that there is sufficient assembly space.
- Pay attention to tidiness and cleanness at the assembly site! Loosely stacked or lying around components and tools are accident sources.
- After completion of maintenance work, ensure that all covers are correctly mounted.
- Wear protective helmet.

Personal protective equipment

The following must be worn during maintenance work:

- Work clothes
- Protective gloves
- Safety shoes
- Protective helmet.

Maintenance book

In barriers where personal traffic cannot be excluded, a maintenance book must be maintained.

In any other barriers, maintenance of a test book is not mandatory. However, we recommend keeping a test book in such barriers as well, to properly document all maintenance work.

11.2 Cleaning

The cleaning interval essentially depends on the environmental conditions and the climate.

Aggressive cleaning aids and substances

NOTICE

Unit damage possible!

Aggressive detergents and consumables may damage or destroy components, electric cables, or the coating of the barrier.

– Do not use cleaning agents with aggressive ingredients.

11.3 Cleaning from the outside

Clean the barrier housing and the barrier boom at regular intervals.

11.4 Clean barrier housing from the inside

Carrying out cleaning work:

1. Switch off power supply and secure against restarting.

DANGER!

Mortal danger by electric voltage!

- Keep moisture and dust away from live parts. Moisture or dust may cause a short circuit.
- Never clean the barrier housing and barrier boom with vapour or pressure-jet cleaners.

2. Remove contamination from the outside of the barrier housing properly using water with washing-up liquid and a square of cloth. Do not bring control units and electrical components in contact with moisture.
3. Remove dust inside the housing with a vacuum cleaner.
4. After cleaning work, check that all previously opened covers are closed again and that all safety equipment functions correctly.

11.5 Maintenance schedule

The following describes the maintenance work that is necessary for optimal, trouble-free operation. Maintenance intervals must be observed.

If increased wear of individual components or functional groups is revealed during regular inspections, the operator must reduce the required maintenance intervals on the basis of the actual signs of wear.

In case of questions on maintenance work and intervals, contact your dealer. Procure spare parts from your dealer or directly from the manufacturer. For the address, see invoice, delivery note or the reverse of these instructions.

Interval	Maintenance work	To be carried out by
Monthly	Visual inspection of the housing, inside and out, for damage and corrosion. Clean the housing and repair paint damage as necessary. Remove corrosion damage.	Specialist
	Visual inspection of foundation anchors, attachment profiles and mounting material for corrosion. Remove corrosion damage.	Specialist
	Visual inspection of the barrier boom for damage and corrosion. Clean the barrier boom and repair paint damage as necessary. Remove corrosion damage.	Specialist
	Visual inspection of additional parts, such as nesting posts and the pendulum support, for damage and corrosion. Clean additional parts and repair paint damage. Remove corrosion damage.	Specialist
	Where they exist, inspect lenses and mirrors of the light barriers.	Specialist
Every 6 months	Perform all monthly maintenance work.	Specialist
	Check function of the residual current operated device	Electrician
	Check the barrier housing fastening screws for tightness. If required, tighten the screws.	Specialist
	Check the barrier boom and flange fastening screws for tightness. If required, tighten the screws.	Specialist
	Check the screws of the system parts, such as pendulum support and nesting post, for tightness. If required, tighten the screws.	Specialist

Interval	Maintenance work	To be carried out by
Every 12 months	Perform all monthly and semi-annual maintenance work.	Electrician / specialist
	Check the barrier's mechanics.	MHTM MicroDrive service specialist
	Check the spring setting of the lever system.	
	Check barrier boom position.	
	Visual inspection of the induction loops and the carriageway in the area of the loops for damage.	
	Check the induction loops' function. → See separate document "Description of control units MGC and MGC Pro for MHTM™ MicroDrive barriers", chapter "Detector 1 (A-B)".	
	Check the induction loops. Measure the contact resistance, insulation resistance, and inductivity of the induction loops. → See page 54.	
	Where they exist, check the function of additional safety equipment, such as light barriers.	
	Check the barrier's function.	
	Check the barrier's locking in the position "Closed".	
	Check the advanced warning on barriers with the active function "Traffic lights lead".	
	Check electric cables for damages.	
	Check if all electrical connections are firm.	
	Check signs and labels for completeness and legibility.	

Table 15: Maintenance schedule

12 Malfunctions

This chapter describes possible causes of malfunctions and trouble shooting tasks.

Contact your dealer in case of malfunctions that cannot be repaired by means of the following information. Procure spare parts from your dealer or directly from the manufacturer. For the address, see invoice, delivery note or the reverse of these instructions.

12.1 Safety

→ See also safety notes on page 16, chapter 2.6 "Occupational safety and special dangers".

General

⚠ WARNING

Danger of injury from inappropriate troubleshooting!

Inappropriate troubleshooting can cause severe or lethal injuries.

- All troubleshooting work must be performed by specialists or electrical specialists.
- Observe possible movements of the barrier boom. Defective control may lead to inadvertent movement of the barrier boom.
- Prior to work, ensure that there is sufficient assembly space.
- Pay attention to tidiness and cleanness at the assembly site! Loosely stacked or lying around components and tools are accident sources.
- Deactivate the barrier if any components are damaged, e.g. the barrier boom.
- After completion of troubleshooting, ensure that all covers are correctly mounted.

Danger of injury after lightning strike

⚠ WARNING

Danger of injury from total outage or barrier malfunction after lightning has hit the barrier!

If the barrier is struck by lightning, this may lead to total outage or malfunction of the barrier. The malfunction may cause unexpected barrier behaviour and thus lead to serious injury!

– If the barrier is struck by lightning, have an electrician check the barrier for damage and proper function. Repair barrier if required.
– Observe possible movements of the barrier boom. Defective control may lead to inadvertent movement of the barrier boom.

12.2 Malfunction table – barrier malfunctions

→ For requirements to the MHTM MicroDrive service specialist, see page 15, chapter 2.4.1.

Malfunction: Display is difficult or impossible to read.

Possible cause	Corrective action	Removal by
Display contact set too light or dark.	Correct display contact. → See separate document "Description of control units MGC and MGC Pro for MHTM™ MicroDrive barriers", chapter "Setting display contrast".	Electrical specialist

Malfunction: Barrier out of operation. The message "Safety device missing" appears on the display.

Possible cause	Corrective action	Removal by
No safety loop is connected to the plug-in module "Detector" and no safety light barrier to clamp X11 and X20.	Connect either safety loop or safety light barrier. → See page 134, chapter 16.1.	Electrical specialist
Safety device defective	Replace safety device	Electrical specialist

Malfunction: Barrier does not open.

Possible cause	Corrective action	Removal by
Power supply is not connected	■ Switch on power supply. ■ Check power supply.	Electrical specialist
Error present. The corresponding error message is displayed.	Depending on error message, check components, wiring, etc.	MHTM MicroDrive service specialist
Power supply is present. Control unit display does not light up.	Control unit defective. Replace the control unit. Contact service.	MHTM MicroDrive service specialist
Closing signal is active.	Remove closing signal	Electrical specialist
Too high trigger sensitivity set for the loop.	Check the response sensitivity of the loop and adjust if necessary.	MHTM MicroDrive service specialist

Malfunction: Barrier does not open completely.

Possible cause	Corrective action	Removal by
Spring tension in the balancing springs of the lever system set too weakly for the barrier boom weight.	Adjust balancing springs. → See page 80, chapter 8.13.	MHTM MicroDrive service specialist

Malfunction: Barrier does not close. The message "Waiting for release" appears on the display.

Possible cause	Corrective action	Removal by
The message appears after the voltage supply is switched on, after voltage returns and after reset.	The release signal can be given by an external closing signal or by pushing the left operating button at the control device. → See separate document "Description of control units MGC and MGC Pro for MHTM™ MicroDrive barriers", chapter "Start-up settings".	Operator

Malfunction: Barrier does not close. The message "Waiting for passage" appears on the display.

Possible cause	Corrective action	Removal by
The message appears after the voltage supply is switched on, after voltage returns and after reset.	■ The barrier closes once a vehicle passes. → See separate document "Description of control units MGC and MGC Pro for MHTM™ MicroDrive barriers", chapter "Start-up settings". ■ Confirm message with the left button at the control unit.	Operator

Malfunction: Barrier does not close. The display shows: ?

Possible cause	Corrective action	Removal by
Loop not connected.	Connect loop	MHTM MicroDrive service specialist
Detector mode incorrectly parameterised.	Check parameterisation of the detector module and correct if required. → See separate document "Description of control units MGC and MGC Pro for MHTM™ MicroDrive barriers", chapter "Detector 1 (A-B)".	MHTM MicroDrive service specialist
Loop defective.	Replace loop.	MHTM MicroDrive service specialist
Transfer resistance at the terminals	Cut connecting leads, strip and connect them again without end sleeves.	MHTM MicroDrive service specialist

Malfunction: Barrier does not close.

Possible cause	Corrective action	Removal by
Opening command is active.	Cancel the opening command.	Electrical specialist
Induction loop reports engaged, although no vehicles are present.	■ Check and if necessary adjust loop frequencies. ■ Measure loops. Insulation resistance: > 1 Mohm contact resistance: 0.8 to 2.5 ohm Replace loop if the measured values differ from the specified values.	MHTM MicroDrive service specialist
Wire bridge between terminals X11 IN and OUT missing.	If no safety light barrier is connected, a wire bridge must be installed between the clamps X11 OUT and IN. → See page 134, chapter 16.1.	MHTM MicroDrive service specialist
Message "Boom contact active": At the "Boom contact input" input, boom ejection was detected.	Replace the barrier boom	MHTM MicroDrive service specialist

Malfunction: Barrier does not close immediately after through traffic, but only after the hold-open time.

Possible cause	Corrective action	Removal by
Opening signal is active for too long.	Shorten opening signal to max. 1 second.	Electrical specialist
Safety loop does not respond.	Check the response sensitivity of the safety loop. Adjust setting if necessary.	MHTM MicroDrive service specialist

Malfunction: Barrier does not close completely.

Possible cause	Corrective action	Removal by
Spring tension in the balancing springs of the lever system set too strongly for the barrier boom weight.	Adjust balancing springs. → See page 80, chapter 8.13.	MHTM MicroDrive service specialist
Impact was recognised.	Wait several seconds, barrier closes if no obstacle is below the barrier boom anymore.	–

Malfunction: Barrier closes, although a vehicle is standing on the safety loop.

Possible cause	Corrective action	Removal by
Option "Safety loop" for the parameters "Mode A" or "Mode B" not selected in the menu "Detector 1 (A-B)".	Select option "Safety loop".	MHTM MicroDrive service specialist
Cut off angle incorrectly parameterised.	Check and adjust the cut off angle.	MHTM MicroDrive service specialist
Too low trigger sensitivity set for the loop.	Check the response sensitivity of the loop and adjust if necessary.	MHTM MicroDrive service specialist
Unsuitable loop geometry installed.	Install an appropriate loop geometry.	MHTM MicroDrive service specialist
Loop fault due to external loop detectors or other barriers in the proximity.	Check the operating frequency of the loops and adjust if necessary	MHTM MicroDrive service specialist
Safety light barrier connected incorrectly or defective.	Check safety light barrier function.	MHTM MicroDrive service specialist
User misbehaviour e.g. driving into closing barrier, or following behind another vehicle.	Retrofit signal light, such as red/green signal light and parameterise lead time.	MHTM MicroDrive service specialist
	Upgrade signs.	Operator

Malfunction: Menu items of the plug-in modules, such as "Detector 1 (A-B) are displayed but cannot be operated.

Possible cause	Corrective action	Removal by
The SW-version of the plug-in module is lower than 0.10. The SW version is displayed in the respective menu in the submenu "Information".	■ Use plug-in module with a SW version 0.10 and up. ■ Perform update to SW-Version 0.12.	MHTM MicroDrive service specialist

Malfunction: The menu language of the plug-in module is English although another language was set.

Possible cause	Corrective action	Removal by
The SW-version of the plug-in module is 01.10. The SW version is displayed in the respective menu in the submenu "Information".	Perform update to SW-Version 0.12.	MHTM MicroDrive service specialist

12.3 Event, warning and error messages on the display

The control unit differentiates between events, warnings and errors. The corresponding message is displayed.

Event messages "INFO"

Event messages inform about events such as "switching to battery operation". The barrier continues to run normally. Event messages do not influence the outputs of the control unit.

Warning messages "WARNING"

Faults that could be reset by the control unit are displayed as warnings. Operation of the barrier is not or only briefly impaired.

If the function "Warning" has been chosen for an output, this output is deactivated at pending warnings (fail safe).

Error messages "ERROR"

Faults that cannot be reset by the control unit are displayed as errors. The barrier is shut down.

If the function "Error" has been chosen for an output, this output is deactivated at pending warnings (fail safe).

To take the barrier into operation again, the fault must be removed by an MHTM MicroDrive service specialist and a reset according to chapter 12.4 must be performed.
→ For requirements to the MHTM MicroDrive service specialist, see page 15, chapter 2.4.1.

NOTE!

With some messages, the control unit tries to reset the cause of the message. If the attempt was successful, the message is displayed as WARNING. If the attempt failed, the message is displayed as ERROR.

12.3.1 Event, warning and error messages – Logic control (control unit)

Number	Designation	Possible cause	Corrective action
FF01 WARNING	Barrier mechanical fault	The first closing motion could not be performed completely.	■ If required, remove obstacle below the barrier boom. ■ Check barrier mechanics. ■ Check the spring setting of the balancing springs.
FF02 WARNING	Detector safety signal	Communication between logic control and detector module impaired.	■ Perform reset. → See page 125, chapter 12.4. ■ Check plug contacts. ■ Clean plug contacts with spirit. Observe ESD provisions. ■ Replace the control unit.
FF03 ERROR	Safety device missing	No monitoring loop is connected to the detector module and no safety light barrier to the clamps X11 and X20.	Connect either the safety loop or safety light barrier. → See page 134, chapter 16.1.
		Safety device defective	Replace safety device.
		Sensitivity settings in the "Detector" menu too low. Not all vehicles are recognised.	Change sensitivity. → See separate document "Description of control units MGC and MGC Pro for MHTM™ MicroDrive barriers", chapter "Detector 1 (A-B)".
FF04 ERROR	Barrier too fast	Spring tension in the balancing springs of the lever system set too weakly for the barrier boom weight.	■ Adjust balancing springs. → See page 80, chapter 8.13. ■ Contact service if required.
FF05 WARNING	Book contact	At the "Boom contact" input, boom ejection was detected.	■ Replace the barrier boom ■ If required, choose the option "Enabled" in the "Boom contact settings" menu. ■ Verify cables.

Number	Designation	Possible cause	Corrective action
FF06 WARNING	Vandalism	The barrier boom was either lifted from the lower end position or stopped when closing.	In the closed position, check that the lever system latches.
FF07 INFO	Battery Backup active	The barrier is supplied with voltage via the battery backup.	Check and restore voltage supply.
FF08 INFO	Mains operation active again after battery mode	The barrier is supplied with mains voltage again.	–
FF09 INFO	Reduced opening angle	In some barrier types, the opening angle can be mechanically limited with attachments. The control unit performs the required parameter adjustments automatically.	Message appears although the opening angle has not been limited mechanically. ■ Remove obstacle to ensure that the lever system can lock in both end positions.
FF30 WARNING	Impact detection	Impact was recognised by the input "external impact contact".	■ Wait for a few seconds. The barrier closes if no obstacle is below the barrier boom anymore. ■ When no obstacle is present below the barrier boom, check input, e.g. contact strip.
3120 ERROR	Mains power failure	Short-term mains outage was recognised	■ Check supply voltage/mains quality
5530 ERROR	EEPROM checksum	Check sum of the parameter incorrect	■ Re-set parameters to factory defaults. → See separate document "Description of control units MGC and MGC Pro for MHTM™ MicroDrive barriers", chapter "Factory settings". ■ Contact service if required.
6000 ERROR	Module update error	A firmware update was not performed correctly.	■ Restart the control unit ■ If the error continues to be present, perform the update again via the service module.
6102 ERROR	Software error system bus	Within the control, an error is pending in communication.	■ Check FW versions of all plug-in modules. If required, perform update via service module. ■ If all FW versions are up to date, contact service.

Number	Designation	Possible cause	Corrective action
6105 ERROR	Error on homing	The barrier could not perform any reference run.	■ Check motor communication. ■ Check mechanics. ■ Perform reset. → See page 125, chapter 12.4.
8130 WARNING	Heartbeat error	Communication with a plug module was interrupted.	■ Check if all plugged modules are listed in the main menu. ■ Perform reset. → See page 125, chapter 12.4. ■ Contact service if required.

Table 16: Event, warning and error messages – logic control (control unit)

12.3.2 Event, warning and error messages – Motor GW

Number	Designation	Possible cause	Corrective action
2220 WARNING	Over current	Overcurrent was recognised	■ Warning may appear in connection with impact. ■ If no impact took place, check the cables. ■ Contact service if required.
3211 WARNING	Over voltage	Overvoltage was recognised	■ Warning may appear in connection with impact. ■ If no impact took place, check the cables. ■ Contact service if required.
3221 WARNING	Under voltage	Undervoltage was recognised	The message may occur at an impact below the cut off angle. ■ Check if an impact has occurred below the cut off angle.
			There is no impact. ■ Check wiring. ■ Check if there is an overload of the 24 V DC-supply. Supply additional consumer via separate mains unit. ■ Check the balancing spring settings. If required, remove heavy attachments from the barrier boom. ■ If required, contact Service.

Number	Designation	Possible cause	Corrective action
4210 WARNING	Over temperature	A high temperature was recognised.	■ Check motor temperature via display. The temperature must be below 100 °C. → See separate document "Description of control units MGC and MGC Pro for MHTM™ MicroDrive barriers", chapter "Motor GW". ■ Contact service if required.
4220 WARNING	Derating error	Motor power intake is reduced to avoid further temperature increase.	■ Remove impermissible attachments ■ Check the spring setting of the balancing springs. ■ Reduce speed of the barrier boom. ■ Contact service if required.
FF30 WARNING	Impact detection	Current increase and speed deviation	■ Check safety devices. ■ Adjust menu "Cut off angle". → See separate document "Description of control units MGC and MGC Pro for MHTM™ MicroDrive barriers", chapter "Cut off angle". ■ Check setting of the parameter "Sensitivity" and adjust if required. → See separate document "Description of control units MGC and MGC Pro for MHTM™ MicroDrive barriers", chapter "Impact settings". ■ If there was no impact on an obstacle/vehicle, check the spring settings of the balancing springs and mechanics.
7510 ERROR	Motor communications error	Communication between motor and control impaired or interrupted	■ Verify cables ■ Contact service if required.
FF32 ERROR	HW-Enable-Test failed	–	Contact service.
FF33 ERROR	Safety device test failed (LS-Test failed)	Safety light barrier test failed	Check light barrier and light barrier connection.

Number	Designation	Possible cause	Corrective action
FF36 WARNING	Motor reset Homing is performed automatically.	A short overload or drop of the voltage supply of the motor controller has triggered a motor reset.	Check the balancing spring settings. If required, remove heavy attachments from the barrier boom.
FF37 ERROR	Motor update failed	An error occurred when updating the software	■ Perform reset. → See page 125, chapter 12.4. ■ Contact service if required.
FF3A INFO	Motor update performed	This message is for information only.	–

Table 17: Event, warning and error messages – Motor GW

12.3.3 Event, warning and error messages – Detector

The warning messages "FF4B" and "FF4C" are also reported through the output function "Error".

Number	Designation	Possible cause	Corrective action
FF4A ERROR	Hardware error	Internal HW function test failed	■ Perform reset. → See page 125, chapter 12.4. ■ Contact service if required.
FF4B WARNING	Loop error A or C	Short circuit or idle loop A or C	■ Remove loop error and perform adjustment. ■ If no loop is connected, select the option "Inactive" in the menu "Detector".
FF4C WARNING	Loop error B or D	Short circuit or idle loop B or D	■ Remove loop error and perform adjustment. ■ If no loop is connected, select the option "Inactive" in the menu "Detector".

Table 18: Event, warning and error messages – Detector

12.3.4 Event, warning and error messages – All modules

Number	Designation	Possible cause	Corrective action
6010 WARNING	Watchdog reset	SW error	Contact service if required.
8110 WARNING	Bus fault	Warning	Contact service if required.
8120 WARNING	Bus HW fault	Warning	■ Check DIP switch next to service interface (position ON) ■ Remove devices at service interface if required.

Table 19: Event, warning and error messages – All modules

12.4 Reset the barrier

Control unit reset is performed as follows:

- Switch of power supply and switch it on again after 10 seconds.

or

- Press the two middle operating buttons on the control unit display for 5 seconds.

NOTICE	
	Damage to the unit by too-short switching intervals of the mains voltage! – To avoid damage to the equipment the power must remain shut off for at least 10 seconds.

12.5 Closing or opening the barrier boom in case of power failure

Danger of crushing, lever system!

⚠ WARNING	
	Danger of crushing at opened barrier housing at the lever system! The lever system in the barrier housing can cause serious crushing injuries! – Only specialists must manually close or open the barrier boom at voltage failure. – Wear protective gloves.

In case of power failure, the barrier boom may be in the lower or upper dead point. I.e. the barrier boom can no longer be easily moved manually. In this case, proceed as follows:

1. Remove the barrier housing hood.
2. Remove the barrier housing door.
3. Push the coupling rod from the dead point manually. See following figures.
4. Mount the door if applicable.
5. Attach and lock the hood if applicable.

Access XL

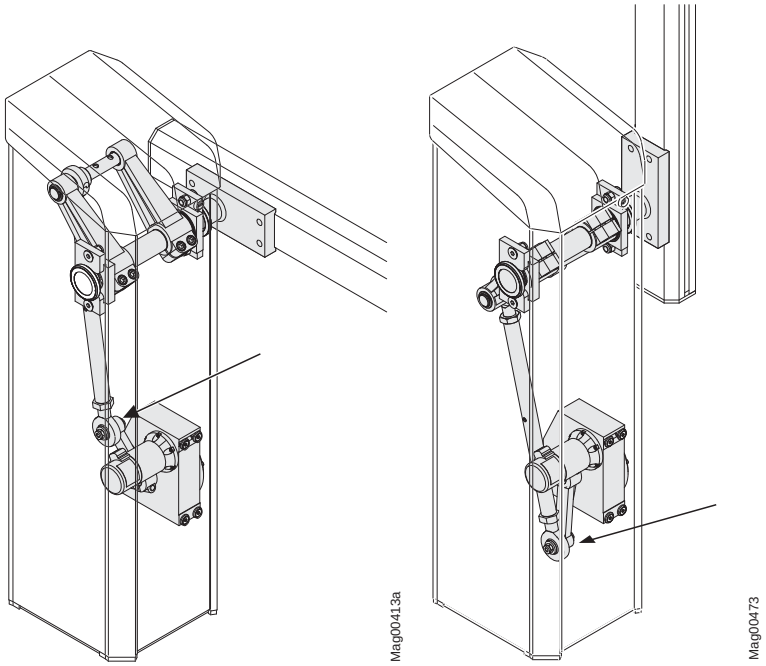

Fig. 56: Manually close or open Access XL barrier boom

Access XXL

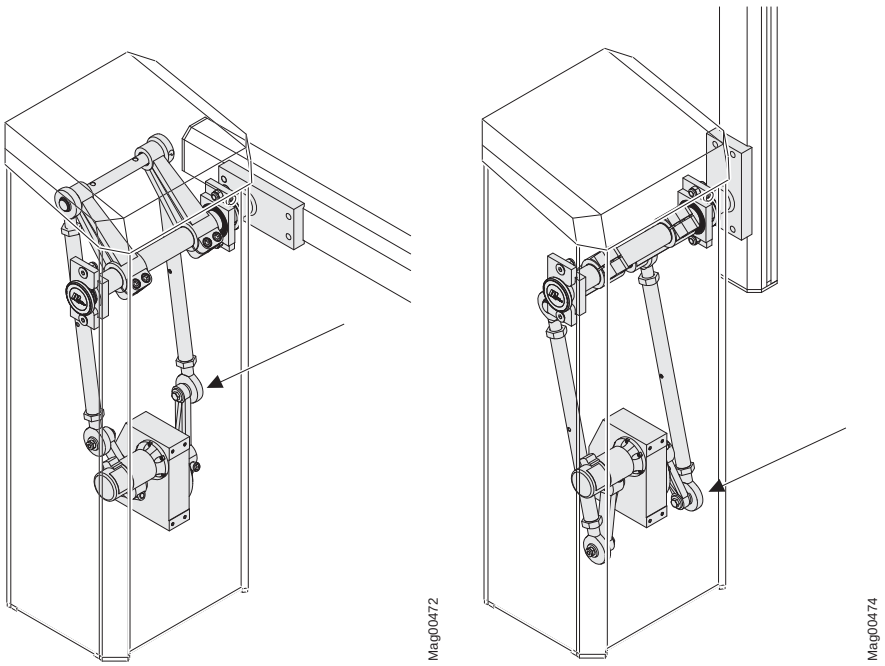

Fig. 57: Access XXL, Manually close or open Access XL barrier boom

13 Repair

13.1 Safety

→ See also safety notes on page 16, chapter 2.6 "Occupational safety and special dangers".

General

⚠ WARNING

Danger by inappropriate repair!

Inappropriate repair can cause severe or lethal injuries.

- All repair work must only be performed by authorised MHTM service specialists.
- Prior to work, ensure that there is sufficient assembly space.
- Pay attention to tidiness and cleanness at the assembly site! Loosely stacked or lying around components and tools are accident sources.
- Only use original spare parts or spare parts approved of by MAGNETIC. Procure spare parts from your dealer or directly from the manufacturer. For the address, see invoice, delivery note or the reverse of these instructions.
- After completion of repair work, ensure that all covers are correctly mounted.

Switching off power supply

⚠ WARNING

Risk of injury and damage by switching off power supply of the barrier!

In case the power supply is switched off and the barrier boom is not mounted, the drive unit and the lever system may be damaged or cause severe or lethal injuries.

- Only switch off power supply when either the barrier boom is mounted or the balancing springs in the lever system are relaxed. If the balancing springs are relaxed, the flange is vertical.

Personal protective equipment

The following must be worn during all repair work:

- Work clothes
- Protective gloves
- Safety shoes
- Protective helmet.

13.2 Spare parts

⚠ WARNING

Risk of injury by incorrect spare parts!

Incorrect or defective spare parts can result in damage, malfunctions or total failure and also impair safety.

– Use only the manufacturer's original spare parts.

Procure spare parts from your dealer or directly from the manufacturer. For the address, see invoice, delivery note or the reverse of these instructions.

Spare part lists can be obtained on request.

13.3 Replacing the barrier boom

Danger of injury

⚠ CAUTION

Danger of injury!

There is a danger of injury when mounting the barrier boom.

– Barrier booms must be installed by two persons.

1. Secure barrier danger area e.g. with barrier tape.
2. Remove the barrier housing hood.
3. Remove the barrier housing doors.

WARNING!

Danger of crushing between barrier boom and barrier housing!

4. Switch off power supply. Ensure that the system is powered down. Secure against reactivation. The balancing springs in the lever system are relaxed. The flange is vertical.
5. Replace and assemble the barrier boom.
   → For barrier booms up to 6 metres, see page 72, chapter 8.12.2.
   → For barrier booms as of 6 metres, see page 76, chapter 8.12.3.

14 Decommissioning, disassembly and disposal

A barrier that is no longer usable should not be recycled as a complete unit, but disassembled into individual components and recycled according to material types. Non-recyclable materials have to be disposed of in an environmental-friendly manner.

- Decommissioning, disassembly and disposal of the barrier may only be carried out by specialised staff.
- Disassemble the barrier in reverse order from assembly.
- The barrier has to be disposed of in accordance with the respective country-specific regulations.

NOTE!

For expert information regarding disposal of electric equipment contact MAGNETIC or competent electricians.

15 EC-Declaration of conformity

15.1 Barrier, pedestrian traffic impossible

Find the EC-Declaration of conformity for barriers where pedestrian traffic can be excluded, in the following.

→ See also page 12, chapter 2.1.2.

EC-Declaration of conformity

Der Hersteller/ manufacturer

MAGNETIC Autocontrol GmbH

Grienmatt 20 – 28 **Telefon** **+49 (0) 7622 / 695-5**
D-79650 Schopfheim **Telefax** **+49 (0) 7622 / 695-602**

Dokumentationsbevollmächtigter/ Documentation Engineer

Herr Stefan Wellinger **Telefon** **+49 (0) 7622 / 695-719**

erklärt hiermit für das von ihm gelieferte Produkt/ *this is to certify that the delivered product*

Bezeichnung / *designation*	Schranke/ barrier MHTM™ MicroDrive
Typ/ *type*	ACCESS XL, ACCESS XXL (mit Sicherheitseinrichtungen gemäß Betriebsanleitung / with safety installations accordance with operating instructions)
Ab Serien-Nr./ *from serial no.*	F05491547

die Konformität nach/ *corresponds to the conformity of*

Richtlinie/ *directive* 2006/42/EG (Machinenrichtlinie/ *machine directive*)
Richtlinie/ *directive* 2004/108/EG (EMV-Richtlinie/ *EMC directive*)

Angewandte harmonisierte Normen (oder Teile daraus)/ *Realized harmonized norms (or parts of them):*

EN ISO 12100-2 (2004-04)
Sicherheit von Maschinen – Grundbegriffe, allgemeine Gestaltungsleitsätze – Teil 2: Technische Leitsätze/
Safety of machinery – basic concepts, general principles for design – Part 2: Technical principles

EN 60204-1 (2007-06)
Sicherheit von Maschinen – Elektrische Ausrüstung von Maschinen – Teil 1: Allgemeine Anforderungen/
Safety of Machinery – Electrical Equipment of Machines – Part 1: Specifications for General Requirements

EN 61000-6-2 (2006-03)
Elektromagnetische Verträglichkeit (EMV) – Teil 6-2: Fachgrundnormen – Störfestigkeit für Industriebereich/
Electromagnetic compatibility (EMC) – Part 6-2: Generic standards – Immunity for industrial environments

EN 61000-6-3 (2007-09)
Elektromagnetische Verträglichkeit (EMV)- Teil 6-3: Fachgrundnormen – Störaussendung für Wohnbereich, Geschäfts- und Gewerbebereiche sowie Kleinbetriebe/ *Electromagnetic compatibility (EMC) – Part 6-3: Generic standards – Emission standard for residential, commercial and light-industrial environements*

EN 13849-1 (2008-12)
Sicherheit von Maschinen – Sicherheitsbezogene Teile von Steuerungen – Teil 1: Allgemeine Gestaltungsleitsätze/
Safety of machinery – Safety-related parts of control systems – Part 1: General principles for design

Diese Erklärung ist keine Zusicherung von Eigenschaften im Sinne des Produkthaftungsgesetzes. Die Sicherheitshinweise der Bedienungsanleitung sind zu beachten./ *This declaration is not a guarantee of characteristics in the sense of product liability law. The safety regulations of the operating instructions/maintenance instructions have to be observed.*

Schopfheim, den 05.12.2012
Ort und Datum/ *place and date*

Unterschrift/ *signature*

15.2 Barrier, pedestrian traffic not impossible

Find the EC-Declaration of conformity for barriers where pedestrian traffic cannot be excluded, in the following.

→ See also page 13, chapter 2.1.3.

EC-Declarations of conformity

Der Hersteller/ manufacturer

MAGNETIC Autocontrol GmbH

Grienmatt 20 – 28 **Telefon** **+49 (0) 7622 / 695-5**

D-79650 Schopfheim **Telefax** **+49 (0) 7622 / 695-602**

Dokumentationsbevollmächtigter/ Documentation Engineer

Herr Stefan Wellinger **Telefon** **+49 (0) 7622 / 695-719**

erklärt hiermit für das von ihm gelieferte Produkt/ *this is to certify that the delivered product*

Bezeichnung / *designation*	Schranke/ barrier MHTM™ MicroDrive
Typ/ *type*	ACCESS XL, ACCESS XXL, (Aufschlagkräfte gemäß EN 13241 mit 6 m Baum nur bei mittlerer und langsamerer Geschwindigkeit. Ab 8,5 m bei allen Geschwindigkeiten. Impact force according EN 13241 with 6 m boom only at middle and slow speed. With 8.5 m boom all speeds.) (alle Typen mit Sicherheitseinrichtungen gemäß Betriebsanleitung / all types with safety installations accordance with operating instructions)
Ab Serien-Nr./ *from serial no.*	F05392073

die Konformität nach/ *corresponds to the conformity of*

Richtlinie/ *directive* 2006/42/EG (Machinenrichtlinie/ *machine directive*)
Richtlinie/ *directive* 2004/108/EG (EMV-Richtlinie/ *EMC directive*)
Verordnung/ *regulation* 305/2011 (Bauprodukteverordnung/ *construction products regulation*)

Angewandte harmonisierte Normen (oder Teile daraus)/ *Realized harmonized norms (or parts of them):*

EN ISO 12100-2 (2004-04)
Sicherheit von Maschinen – Grundbegriffe, allgemeine Gestaltungsleitsätze – Teil 2: Technische Leitsätze/ *Safety of machinery – basic concepts, general principles for design – Part 2: Technical principles*

EN 60204-1 (2007-06)
Sicherheit von Maschinen – Elektrische Ausrüstung von Maschinen – Teil 1: Allgemeine Anforderungen/ *Safety of Machinery – Electrical Equipment of Machines – Part 1: Specifications for General Requirements*

EN 61000-6-2 (2006-03)
Elektromagnetische Verträglichkeit (EMV) – Teil 6-2: Fachgrundnormen – Störfestigkeit für Industriebereich/ *Electromagnetic compatibility (EMC) – Part 6-2: Generic standards – Immunity for industrial environments*

EN 61000-6-3 (2007-09)
Elektromagnetische Verträglichkeit (EMV)- Teil 6-3: Fachgrundnormen – Störaussendung für Wohnbereich, Geschäfts- und Gewerbebereiche sowie Kleinbetriebe/ *Electromagnetic compatibility (EMC) – Part 6-3: Generic standards – Emission standard for residential, commercial and light-industrial environements*

EN 13849-1 (2008-12)
Sicherheit von Maschinen – Sicherheitsbezogene Teile von Steuerungen – Teil 1: Allgemeine Gestaltungsleitsätze/ *Safety of machinery – Safety-related parts of control systems – Part 1: General principles for design*

EN 13241-1 (2011-05)
Tore – Produktnorm Teil 1: Produkte ohne Feuer und Rauchschutzeigenschaften / *Industrial, commercial and garage doors and gates – Product standard – Part 1:Products without fire resistance or smoke control characteristics*

Diese Erklärung ist keine Zusicherung von Eigenschaften im Sinne des Produkthaftungsgesetzes. Die Sicherheitshinweise der Bedienungsanleitung sind zu beachten./ *This declaration is not a guarantee of characteristics in the sense of product liability law. The safety regulations of the operating instructions/maintenance instructions have to be observed.*

Schopfheim, den 25.07.2013

Ort und Datum/ *place and date*

Unterschrift/ *signature*

16 Appendix

16.1 Wiring diagram

Following wiring diagrams apply to standard barriers.
Observe the customer specific wire diagrams for customer specific barriers if applicable.

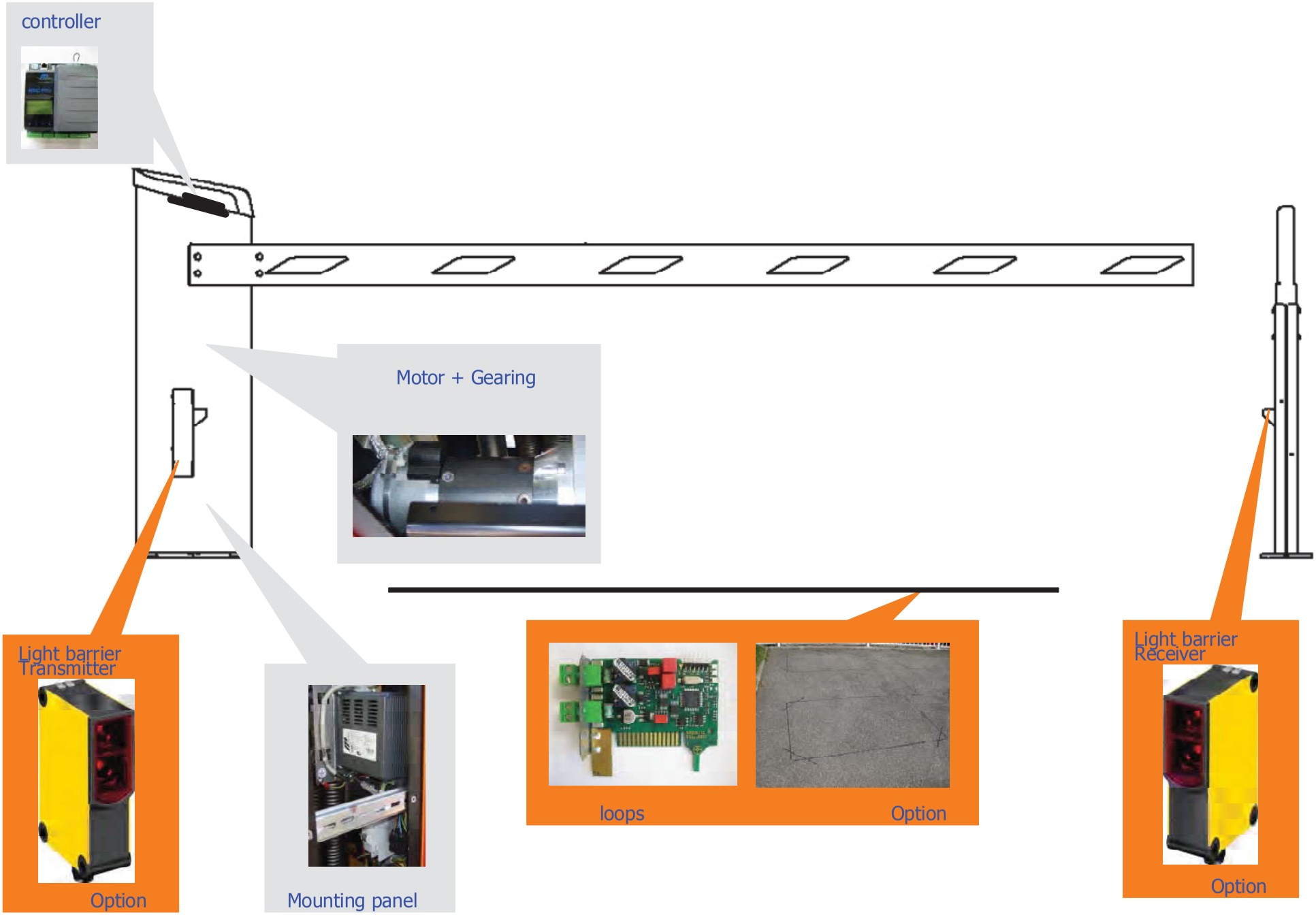

				06.08.2012
				Probst
00	10.10.12	5K12538	gp	
Version	Date	Modification project	Name	ab 5K12528

MHTM
MicroDrive - ACCESS XL

MAGNETIC AUTOCONTROL

ACCESS XL

5526,0038

Page 2
of 5

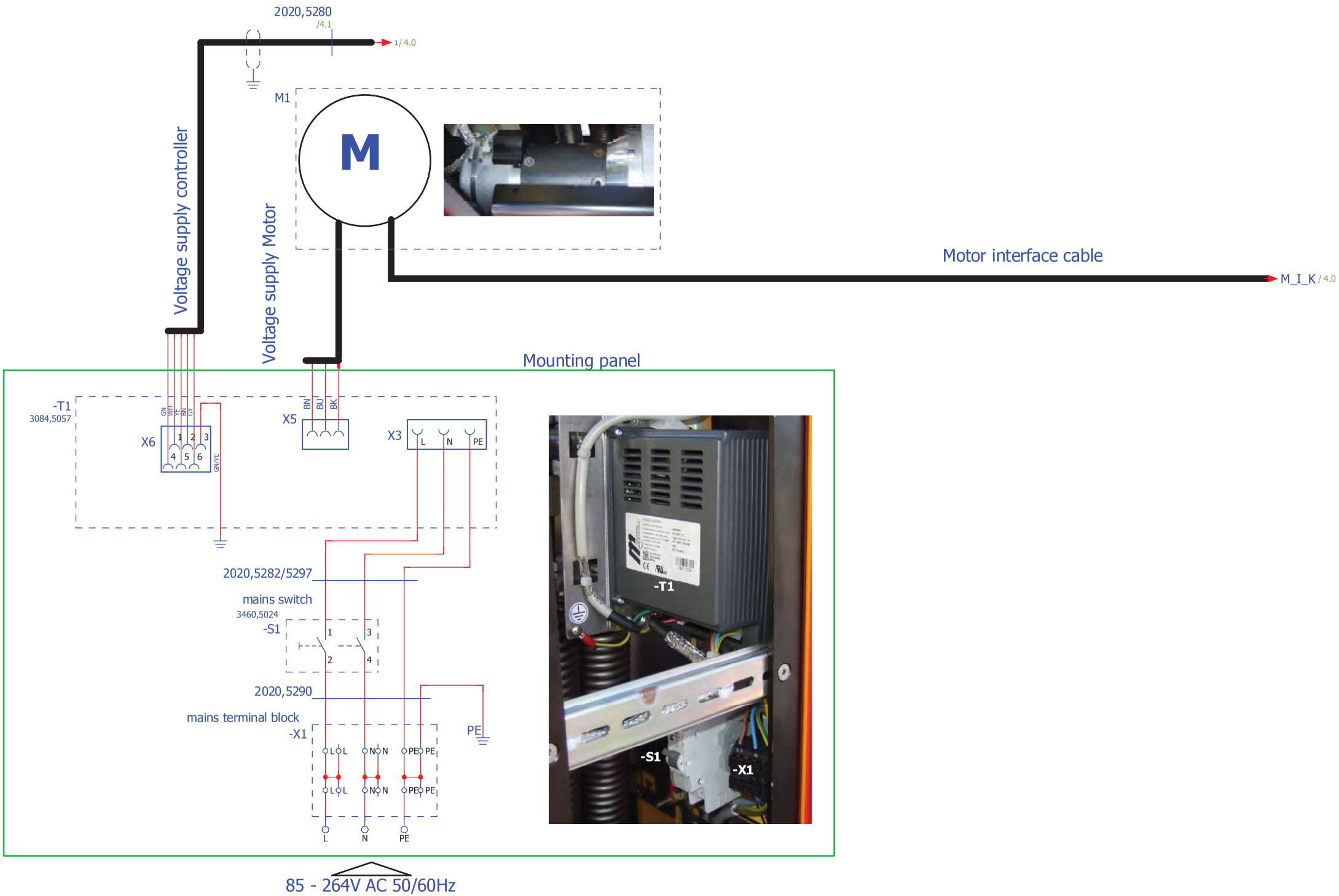

				06.08.2012
				Probst
00	10.10.12	5K12538	gp	
Version	Date	Modification project	Name	ab 5K12528

MHTM
MicroDrive - ACCESS XL

MAGNETIC AUTOCONTROL

mains connection
Power supply unit

5526,0038

Page 3
of 5

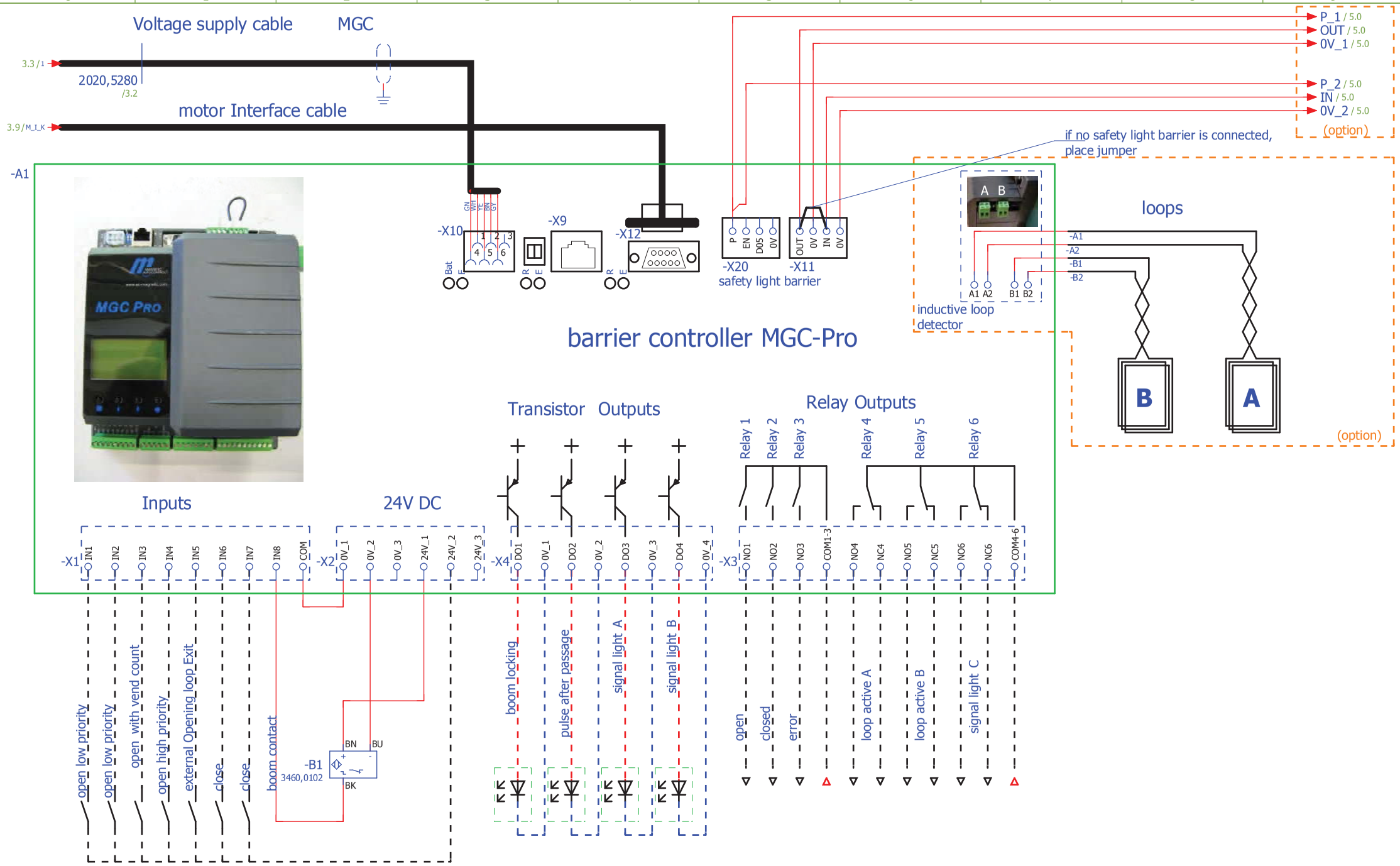

				06.08.2012
				Probst
00	10.10.12	5K12538	gp	
Version	Date	Modification project	Name	ab 5K12528

MHTM
MicroDrive - ACCESS XL

barrier controller
input/output

5526,0038

Page 4
of 5

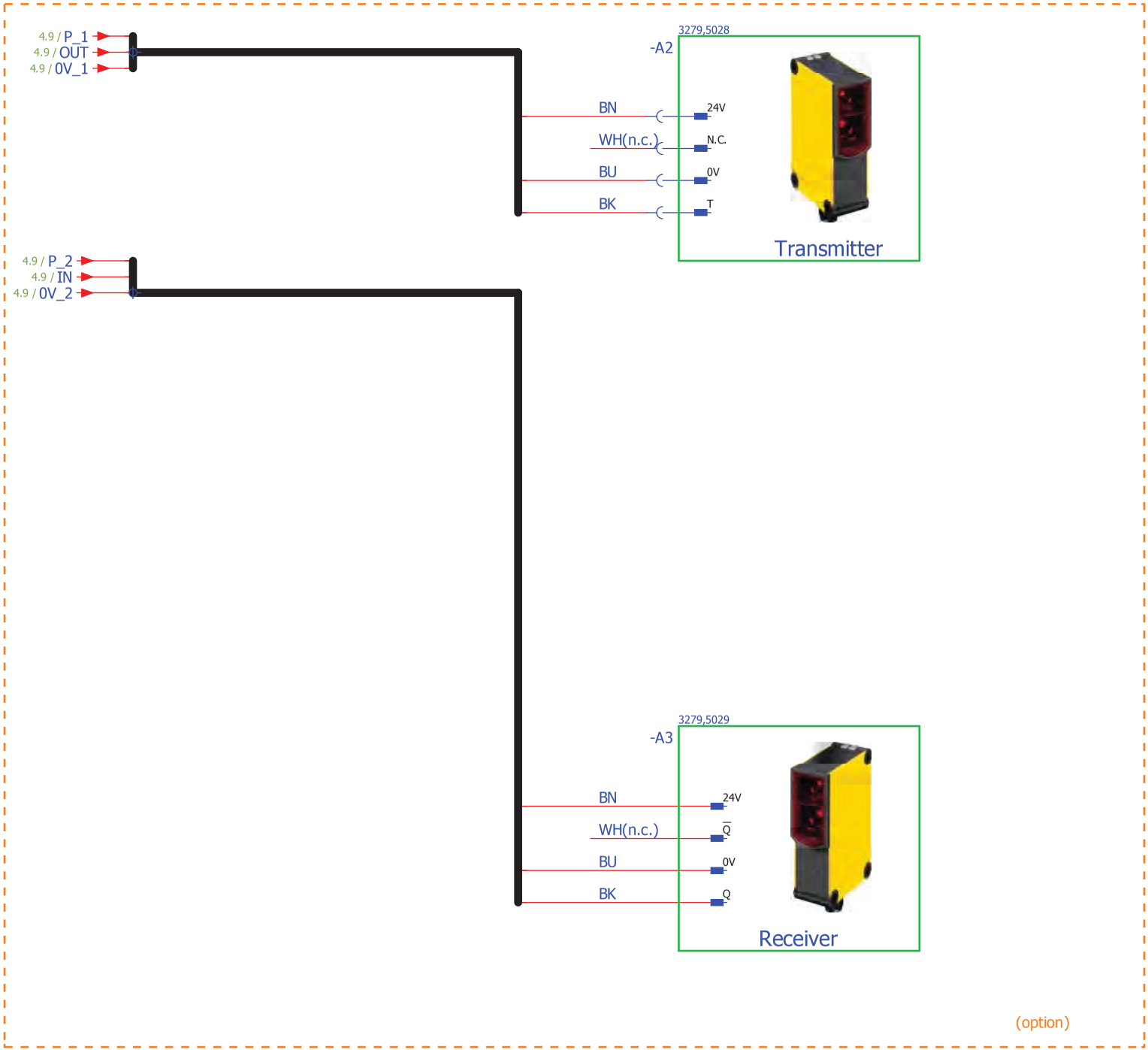

				06.08.2012
				Probst
00	10.10.12	5K12538	gp	
Version	Date	Modification project	Name	ab 5K12528

MHTM
MicroDrive - ACCESS XL

safety-light barriers Option
LS01

5526,0038

Page 5
of 5

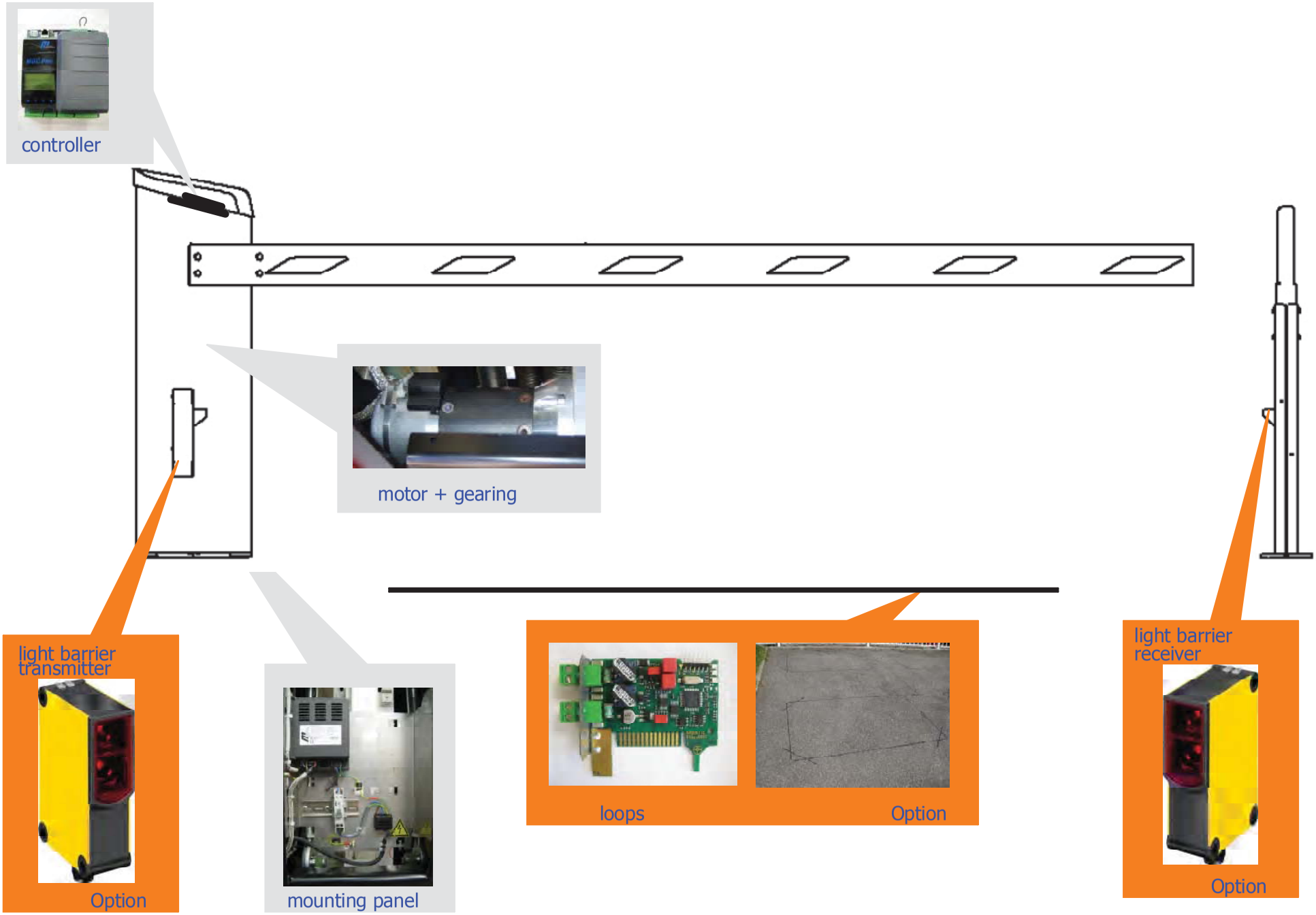

				16.01.2013	MHTM		ACCESS XXL	=
				Probst	MicroDrive - ACCESS XXL			+
Version	Date	Modification project	Name	00 5K13500			5526,0039	Page 2 of 5

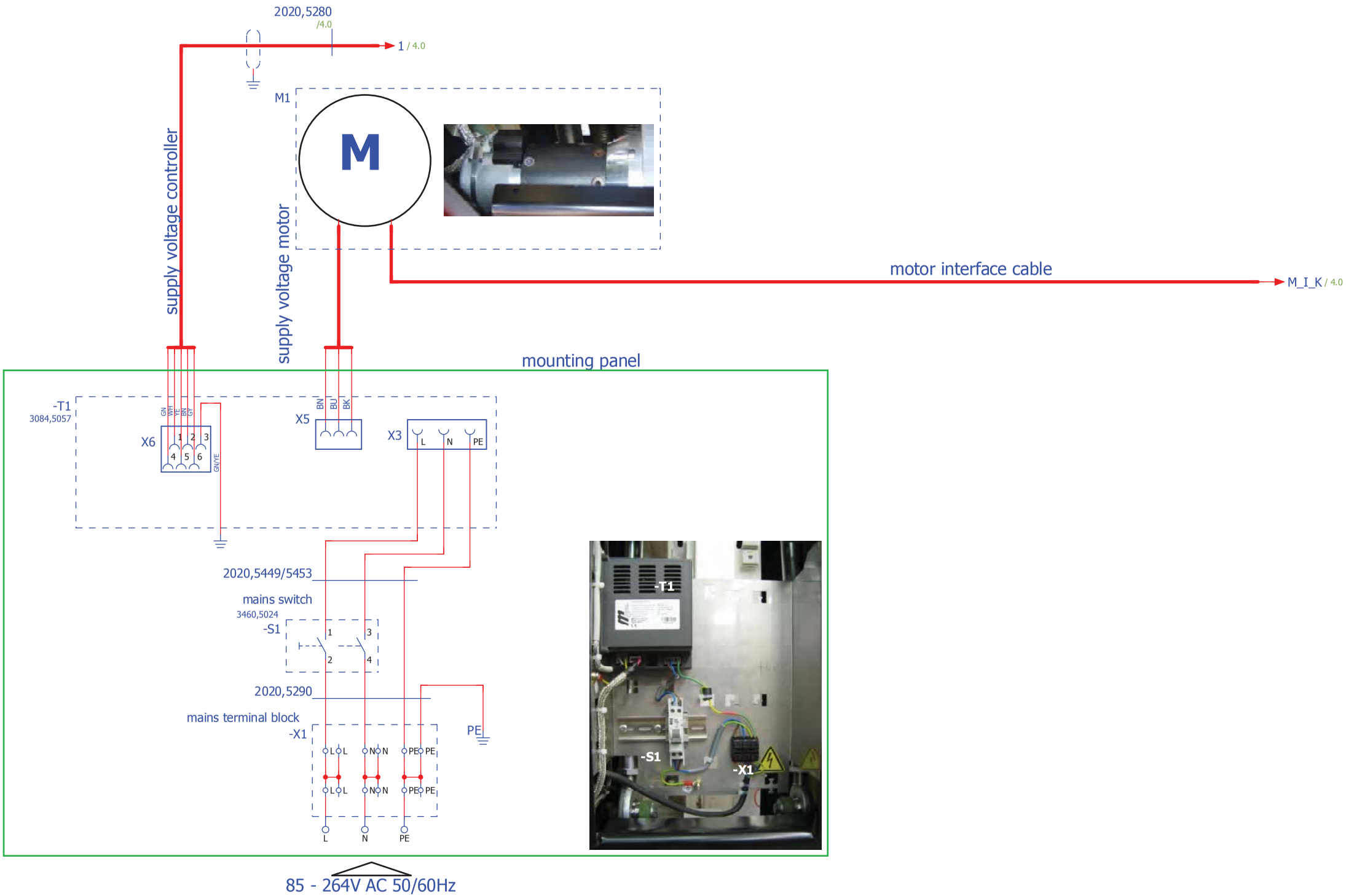

				16.01.2013	MHTM		mains connection	=
				Probst	MicroDrive - ACCESS XXL		Power supply unit	+
Version	Date	Modification project	Name	00 5K13500			5526,0039	Page 3 of 5

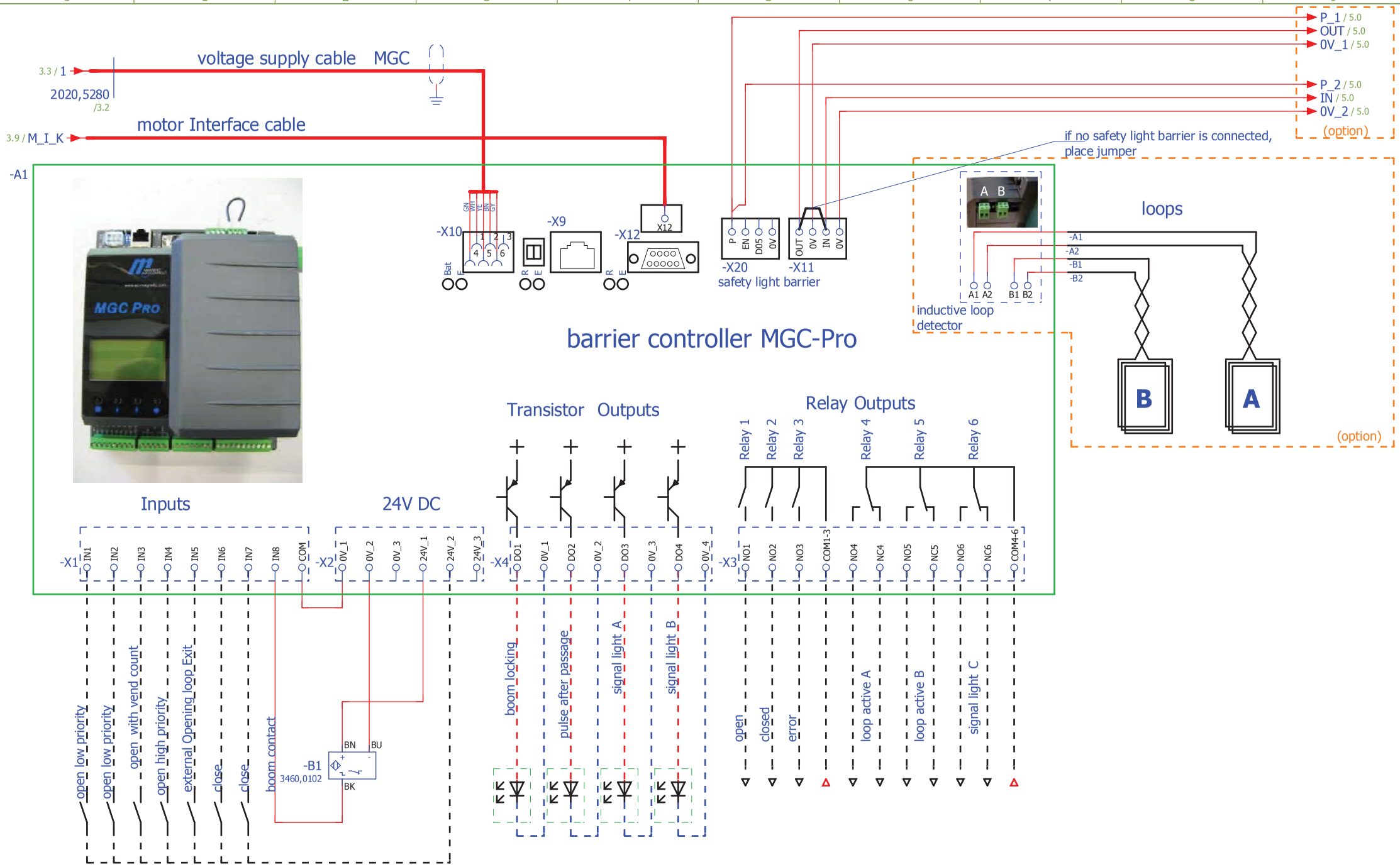

				16.01.2013	MHTM	barrier controller	=
				Probst	MicroDrive - ACCESS XXL	input/output	+
Version	Date	Modification project	Name	00 5K13500		5526,0039	Page 4 of 5

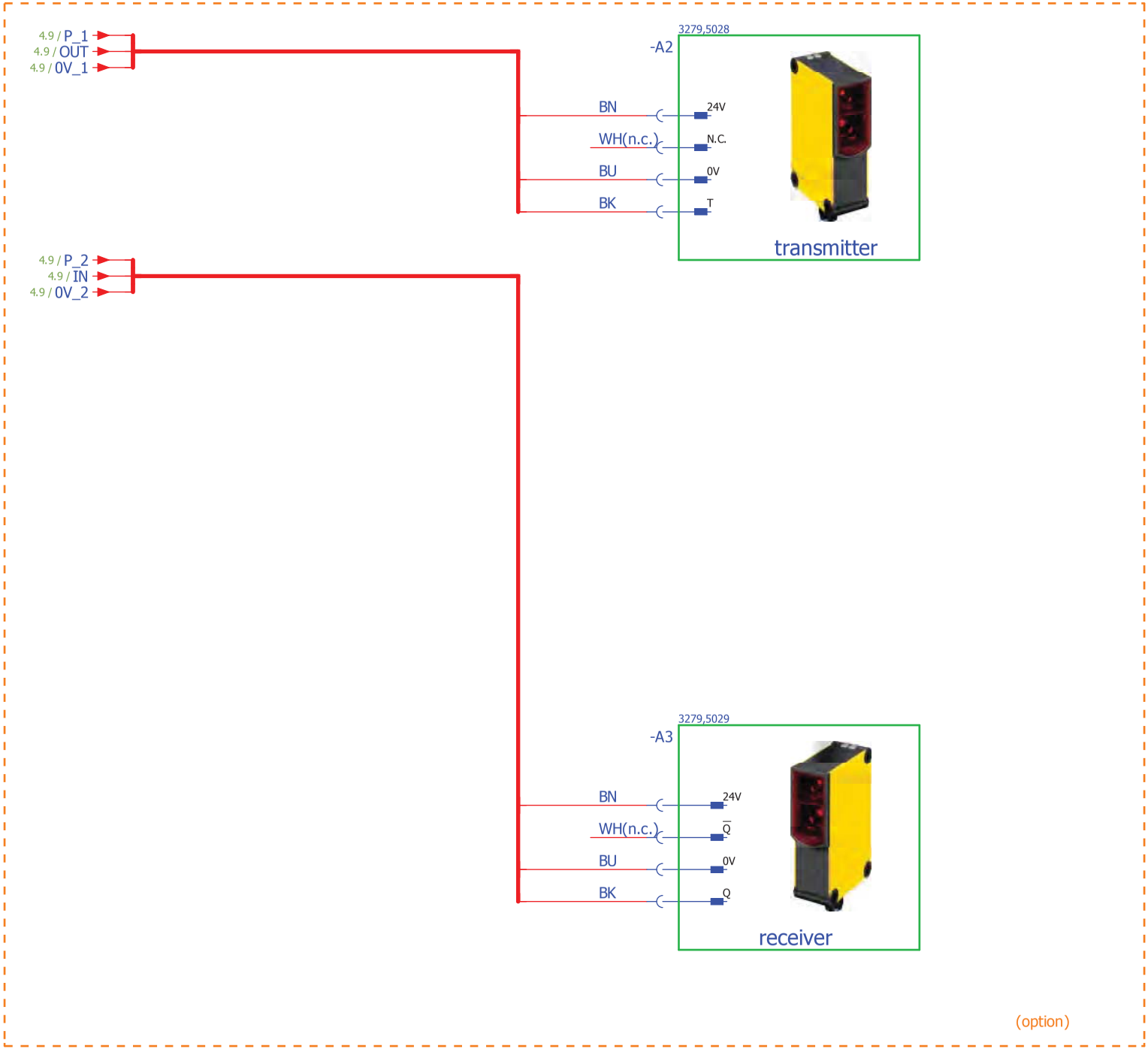

				16.01.2013	MHTM	MAGNETIC AUTOCONTROL	safety-light barriers Option	=
				Probst	MicroDrive - ACCESS XXL		LS01	+
Version	Date	Modification project	Name	00 5K13500			5526,0039	Page 5 of 5

Index

A

Assemble
- Barrier boom as of 6 metres 66
- Barrier boom up to 6 metres 63
- Barrier housing Access XL 58
- Barrier housing Access XXL 59
- Edge protection 71
- Receiver 62
- Safety light barrier 61
- Transmitter 61

Assembly and installation
- Required steps 43

Assembly site
- Access XL 45
- Access XXL 47
- Light barrier posts 50
- Nesting post 50

B

Balancing springs 81, 83, 85
- Check 80
- Equipment Access XL 89
- Equipment Access XXL 90
- Setting 80

Barrier
- Manually close 108
- Manually open 108

Barrier boom 32
Barrier control unit ....See control unit
Barrier housing 32
- Assemble 58
- Mounting material 58
- Open 57

C

Changes 14
Check
- Assembly 93
- Before to initial start-up 106
- Electrical connection 104
- Installation 93

Clamping lever left 83
Clamping lever right 83
Cleaning 111
Commissioning 106
Connecting the power cable 96
Construction products directive 11
Control size 87, 88
Control unit
- Technical data 30

Control unit MGC 7
Control unit MGC Pro 7
Conversion
- Barrier boom as of 6 metres 76
- Barrier boom up to 6 metres 72

Copyright 9
Customer service 10

D

Danger area 23
Decommissioning 129
- Temporarily 109

Design 32
Digital inputs 103
Digital outputs 104
Dimensions
- Access XL 26
- Access XXL 28

Disassembly 129
Disclaimer 10
Disposal 129

E

EC-Declaration of conformity 11
- Barrier, pedestrian traffic impossible 130
- Barrier, pedestrian traffic not impossible 132

Edge protection
- Assemble 71

Electrical connection 94
Electrical specialists 15
Empty conduit
- Light barrier 51

Empty conduits
- Access XL 45, 46
- Access XXL 48
- Light barrier 51

Environmental protection 11
Error 119
ERROR 119
Error messages ERROR 119
Event messages INFO 119
Events 119

F

Foundation 32
- Access XL 45, 46
- Access XXL 47, 48
- Light barrier post 51
- Nesting post 51

Index

Foundation plan 51
  Access XL 46
  Access XXL 48
Function 33

G

General 7

H

Hazard Notes 17

I

Identification 24
Induction loops 52, 55, 56
  Planning notes 37
INFO 119
Inspection
  During the first start-up 106
Instructed People 15
Intended use 12

L

Limitation of liability 9
Loop detector plug-in module
  Technical data 31
Loops ..... See induction loops
Lorry loops 37, 38
Lorry/passenger car loops 39, 40
Lower spring traverse 81

M

Maintenance 110
Maintenance schedule 112
Malfunction table 115
Malfunctions 114
MGC 7
MGC-Pro 7
MHTM™ MicroDrive service expert 15
MicroBoom-XL 32
Modifications 14
Mounting material
  Barrier housing 58
  Post 60

N

Nesting post 32
Non-intended use 13

O

Occupational safety 16, 17
Operating Instructions 7
Operating personnel
  Requirements 15
Output relay 104

P

Parameterisation 7
Passenger car loops 39
Pendulum support 32
Performance declaration 11
Personal protective equipment 16
Pictogram explanation 8
Plausibility check
  Procedure 100
Post
  Mounting material 60
Prohibition signs 92

R

Radio plug-in module
  Technical data 31
Reinforcement
  Access XL 45, 46
  Access XXL 47, 49
Reset barrier 125

S

Safety 12
  Cleaning 110
  Commissioning 105
  Electrical connection 94
  Maintenance 110
  Malfunctions 114
  Operation 105
  Repair 127
  Transport 34
Safety devices
  Connect 100
  Plausibility check 100
Safety light barrier 61
  Align 102
  Check function 103
  Connect 100
Safety loops
  Connect 100
Scope of delivery 10
Service switch 108
Spare parts 128
Specialists 15
  Requirements 15
Spring setting 80
Spring shaft 81, 83, 85
Spring traverse 81
Storage 36
Switching off 108
Switching on 107

T

Technical data
  Access XL 26
  Access XXL 28
Transport 36
Transport inspection 35
Type code 25
Type plate 24

U

Unpacking 57
Upper spring traverse 81

W

WARNING 119
Warning messages WARNING 119
Warning notes 8
Warnings 119
Warranty 10
Wiring diagram
  Access XL 135
  Access XXL 143

MAGNETIC Autocontrol GmbH
Grienmatt 20
79650 Schopfheim
Germany

Tel.: +49 (0)76 22 695 5
Fax: +49 (0)76 22 695 602
E-Mail: info@ac-magnetic.com
Internet: www.ac-magnetic.com

Address sales partner:

05530692